BEYOND Full Arch

SURGICAL KIT MANUAL

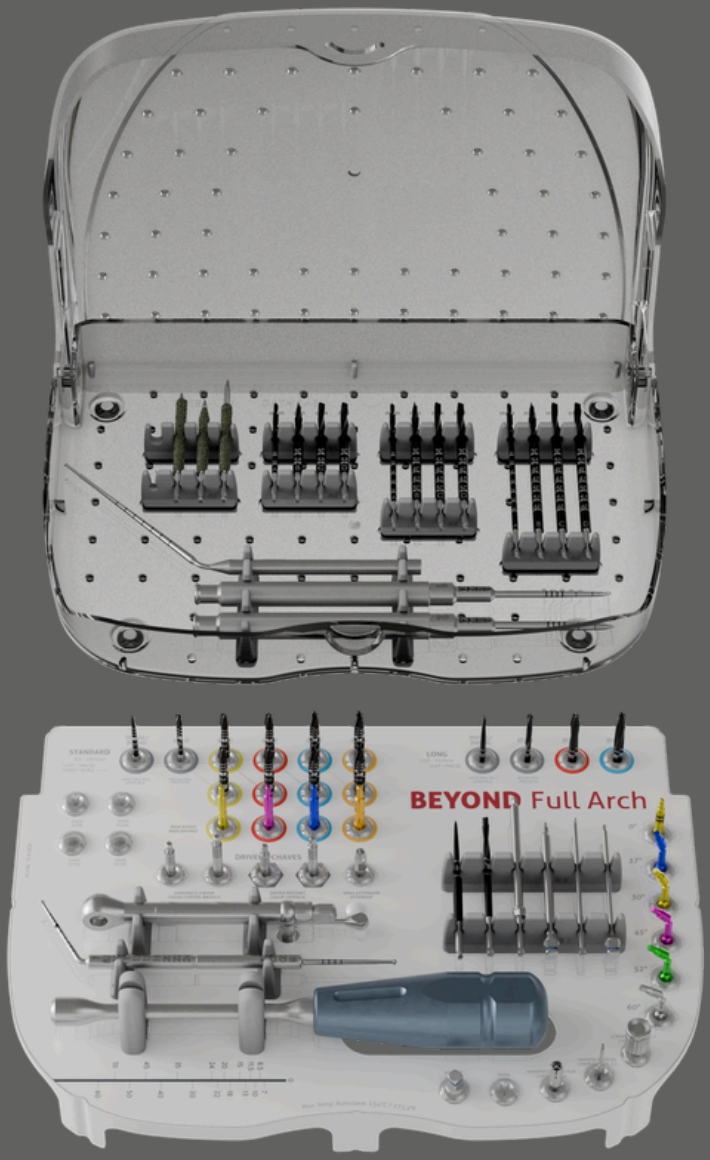

S.I.N.


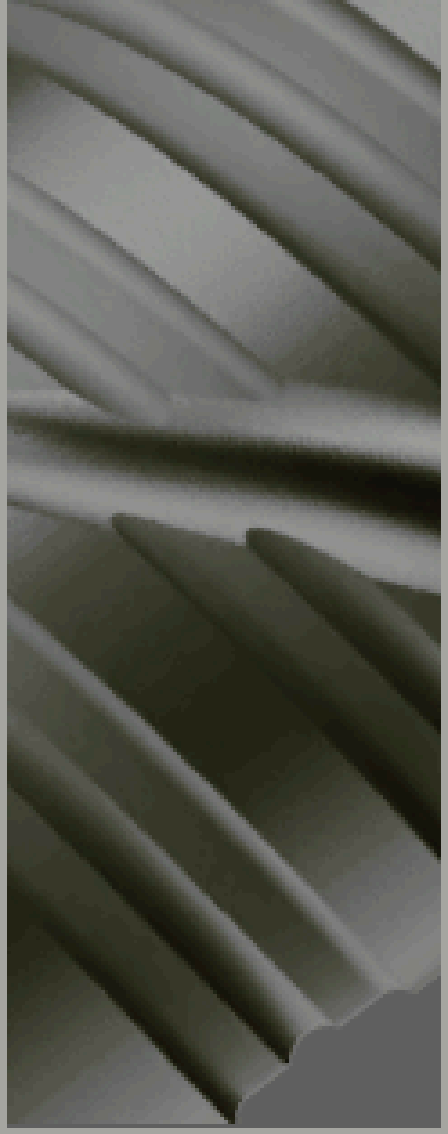

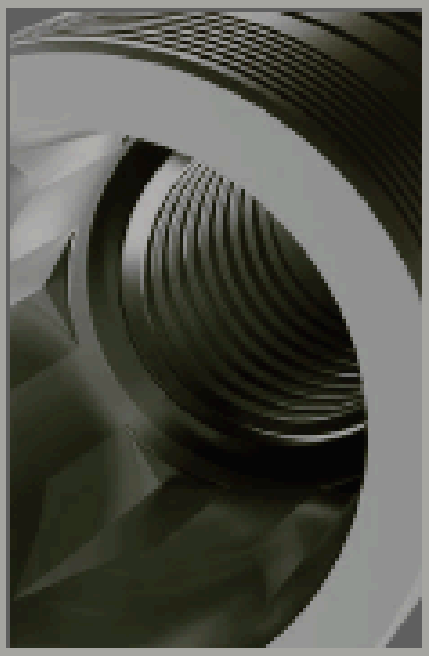
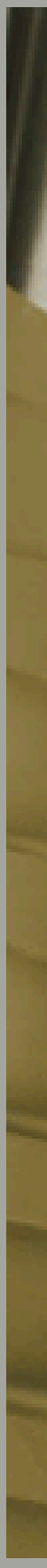


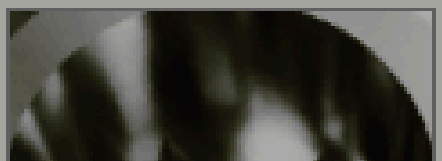

ATTENTION

REMOVE TRANSPORT HOLDERS BEFORE STERILIZATION

The kit is supplied with a strap containing instructions for removing the transport holders. These holders are intended solely to secure the instruments during transportation and must be removed before cleaning and sterilization.

WARNING: Do not autoclave the kit with the transport holders attached. Exposure to high temperatures may cause the plastic to melt, potentially damaging the instruments and tray.

Remove and properly dispose of the transport holders before proceeding with the cleaning and sterilization process.

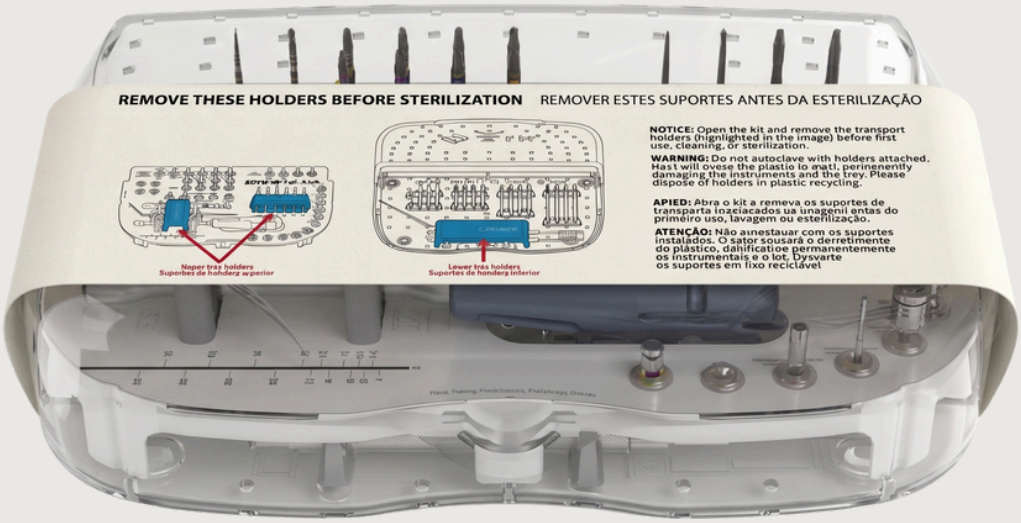

1. INTRODUCTION

A single platform for all implant-supported rehabilitations. The Full Arch Kit was developed to provide implantologists with a single surgical platform capable of supporting everything from conventional protocols to complex rehabilitations involving long, zygomatic, and pterygoid implants. Its modular concept reduces operational complexity, improves surgical workflow organization, and supports the clinician's professional development, making it a scalable solution for fixed full-arch rehabilitations across different levels of complexity.

2. WHAT IS THE FULL ARCH KIT?

The Full Arch Kit is a modular surgical system developed for fixed full-arch implant-supported rehabilitations, supporting procedures ranging from conventional treatments to complex rehabilitations of severely atrophic maxillae. Its core concept is to bring together, within a single surgical platform, the instruments required for different Full Arch treatment approaches.

The kit was designed to be compatible with conventional implants, long implants, zygomatic implants, and pterygoid implants, reducing the need for multiple surgical kits during case planning and execution.

3. WHAT IS THE PURPOSE OF THE KIT?

The purpose of the kit is to enable surgeons to perform fixed full-arch rehabilitations in an organized, standardized, predictable, and reproducible manner, while reducing operational complexity. It is designed to simplify the surgical workflow, from straightforward cases to advanced cases of maxillary atrophy.

4. ITEMS INCLUDED IN THE KIT

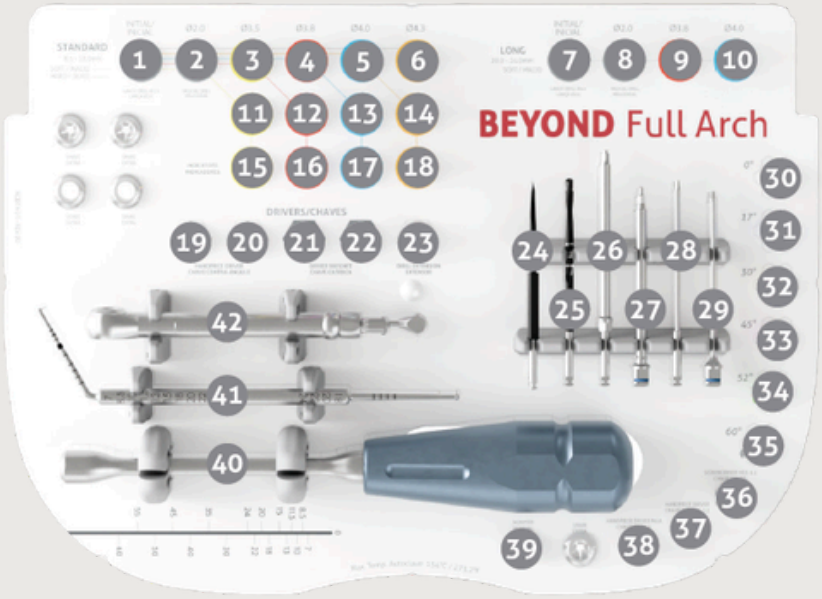

1 **LANCE DRILL Ø2.0MM**
FRESA LANÇA Ø2.0MM
(FRL 20)

2 **HELICAL DRILL Ø2.0MM**
FRESA HELICOIDAL Ø2.0MM
(FRH 20)

3 **CONICAL DRILL Ø3.5MM SOFT**
FRESA CONICA Ø3.5MM SOFT
(FRCV 35S)

4 **CONICAL DRILL Ø3.8MM SOFT**
FRESA CONICA Ø3.8MM SOFT
(FRCV 38S)

5 **CONICAL DRILL Ø4.0MM SOFT**
FRESA CONICA Ø4.0MM SOFT
(FRCV 40S)

6 **CONICAL DRILL Ø4.3MM SOFT**
FRESA CONICA Ø4.3MM SOFT
(FRCV 43S)

7 **LANCE DRILL Ø2.0MM LONG**
FRESA LANÇA Ø2.0MM LONGA
(FRLL 20)

8 **DRILL HELICAL Ø2.0MM LONG**
FRESA HELICOIDAL Ø2.0MM LONGA
(FRHL 20)

9 **DRILL CONICAL Ø3.8MM LONG**
FRESA CONICA Ø3.8MM LONGA
(FRCVL 38)

10 **DRILL CONICAL Ø4.0MM LONG**
FRESA CONICA Ø4.0MM LONGA
(FRCVL 40)

11 **CONICAL DRILL Ø3.5MM HARD**
FRESA CONICA Ø3.5MM HARD
(FRCV 35H)

12 **CONICAL DRILL Ø3.8MM HARD**
FRESA CONICA Ø3.8MM HARD
(FRCV 38H)

13 **CONICAL DRILL Ø4.0MM HARD**
FRESA CONICA Ø4.0MM HARD
(FRCV 40H)

14 **CONICAL DRILL Ø4.3MM HARD**
FRESA CONICA Ø4.3MM HARD
(FRCV 43H)

15 **DIRECTION INDICATOR 3.5mm**
INDICADOR DE DIRECAO Ø3.5
(ID 35)

16 **DIRECTION INDICATOR 3.8mm**
INDICADOR DE DIRECAO Ø3.8
(ID 38)

17 **DIRECTION INDICATOR 4.0mm**
INDICADOR DE DIRECAO Ø4.0
(ID 40)

18 **DIRECTION INDICATOR 4.3mm**
INDICADOR DE DIRECAO Ø4.3
(ID 43)

19 **HANDPIECE DRIVER IMP. MT16° SHORT**
CHAVE CONTRA ÂNGULO IMP. MT16° CURTA
(CTMT 01C)

20 **HANDPIECE DRIVER IMP. MT16° LONG**
CHAVE CONTRA ÂNGULO IMP. MT16° LONGA
(CTMT 01L)

21 **DRIVER RATCHET IMP. MT SHORT**
CHAVE CATRACA IMP. MT CURTA
(CCMT 01C)

22 **RATCHET DRIVER IMP. MT LONG**
CHAVE CATRACA IMP. MT LONGA
(CCMT 01L)

23 **DRIVER EXTENSOR OF DRILL**
CHAVE EXTENSORA DE FRESA MOD.03
(EXFN 03)

24 **DRILL LANCE QUAD Ø2.0MM**
FRESA LANCA QUAD Ø2.0MM
(FRLQ 2045)

25 **DRILL CONICAL Ø2.5MM**
FRESA CONICA Ø2.5MM
(FHE 25P)

26 **DRIVER HANDPIECE IMP. PTG**
CHAVE CONTRA ÂNGULO IMP. PTG
(CTMPTG 01)

27 **DRIVER IMP. PTG**
CHAVE CATRACA IMP. PTG
(CCMPTG 01)

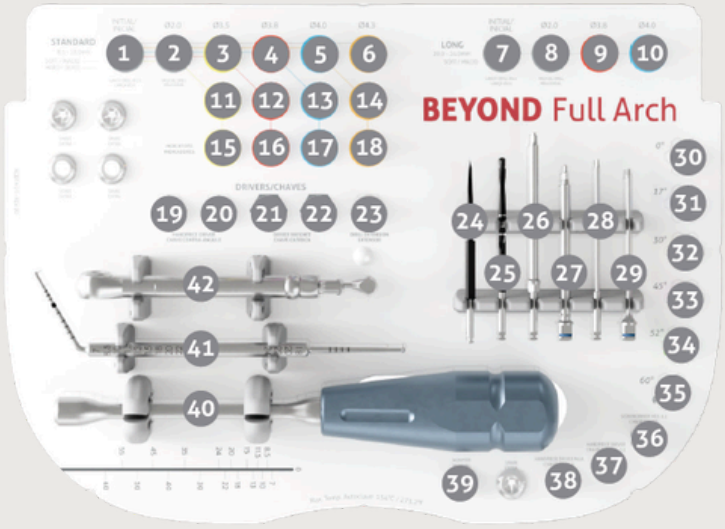

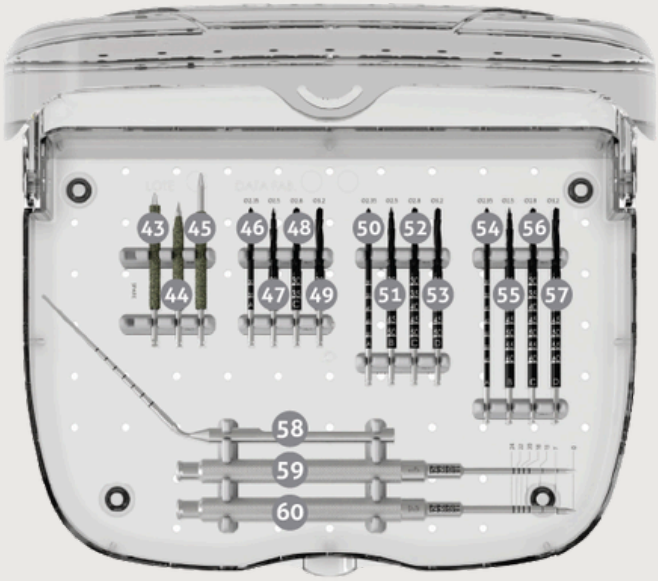

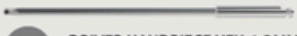

28 **DRIVER HANDPIECE HEX.1.2MM**
CHAVE CONTRA ANGULO HEX.1.2MM
(CTH 1257)



29 **DRIVER RATCHET HEX. 1.2MM EXT.LONG SPE.**
CHAVE CATRACA HEX.1.2MM EXTRA LONGA ESP.
(CDHC 54)



30 **GENGIVAL HEIGHT MT16°**
MEDIDOR TRANSMUCOSO CM 16°
(MTCM 16)



31 **ANGLED DIRECTION INDICATOR 17°**
INDICADOR DE DIREÇÃO ANGULADO 17°
(IDA 17)



32 **ANGLED DIRECTION INDICATOR 30°**
INDICADOR DE DIREÇÃO ANGULADO 30°
(IDA 30)



33 **ANGLED DIRECTION INDICATOR 45°**
INDICADOR DE DIREÇÃO ANGULADO 45°
(IDA 45)



34 **ANGLED DIRECTION INDICATOR 52°**
INDICADOR DE DIREÇÃO ANGULADO 52°
(IDA 52)



35 **ANGLED DIRECTION INDICATOR 60°**
INDICADOR DE DIREÇÃO ANGULADO 60°
(IDA 60)



36 **DRIVER DIGITAL HEX.1.2 SHORT**
CHAVE DIGITAL HEX.1.2 CURTA
(CDH 1220)



37 **DRIVER HANDPIECE HEX.1.2MM LONG**
FIXADOR TORQUE HEX 1.2X30
(CTH 1230)



38 **DRIVER HANDPIECE MINI ABUT. MEDIUM**
CHAVE CONTRA ANGULO MINI ABUT. MEDIA
(CTA 01M)



39 **RATCHET ADAPTER FOR HAND DRIVER**
ADAPTADOR DE CATRACA P/ CHAVE DE MÃO
(ACCM)



40 **HAND DRIVER NARROW**
CHAVE DE MAO ESTREITA
(CMZE)

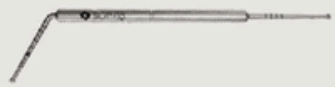

41 **DEPTH PROBE MOD.03**
SONDA DE PROFUNDIDADE MOD. 03
(SOP 03)



42 **SURGICAL TORQUE RATCHET**
TORQUIMETRO CIRURGICO DE HASTE
(TMECC 02)



43 **DRILL DIAMOND Ø4.0X40MM THICK**
FRESA DIAMANTADA Ø4.0X40MM GROSSA
(FBD 40)



44 **DRILL LANCE DIAMOND Ø4.0 THICK**
FRESA LANCA DIAMANTADA Ø4.0 GROSSA
(FBD 40LC)



45 **DRILL DIAMOND Ø4.0 LONG THICK**
FRESA DIAMANTADA Ø4.0 LONGA GROSSA
(FBD 40L)



46 **DRILL HELICAL Ø2.35X40MM**
FRESA HELICOIDAL Ø2.35X40MM
(FHZ 2340)



47 **DRILL HELICAL Ø2.5X40MM**
FRESA HELICOIDAL Ø2.5X40MM
(FHZ 2540)



48 **DRILL HELICAL Ø2.8X40MM**
FRESA HELICOIDAL Ø2.8X40MM
(FHZ 2840)



49 **DRILL HELICAL Ø3.2X40MM**
FRESA HELICOIDAL Ø3.2X40MM
(FHZ 3240)



50 **DRILL HELICAL Ø2.35X55MM**
FRESA HELICOIDAL Ø2.35X55MM
(FHZ 2355)



51 **DRILL HELICAL Ø2.5X55MM**
FRESA HELICOIDAL Ø2.5X55MM
(FHZ 2555)



52 **DRILL HELICAL Ø2.8X55MM**
FRESA HELICOIDAL Ø2.8X55MM
(FHZ 2855)

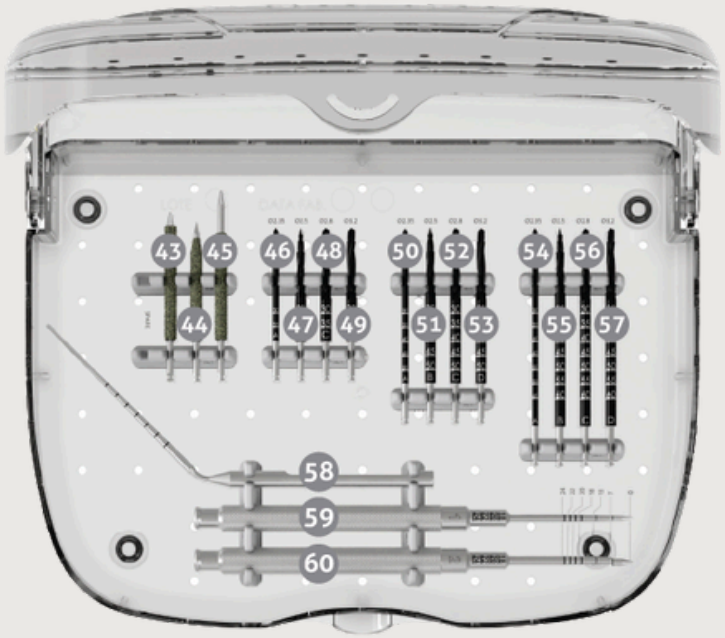



53 **DRILL HELICAL Ø3.2X55MM**
FRESA HELICOIDAL Ø3.2X55MM
(FHZ 3255)



54 **DRILL HELICAL Ø2.35X70MM**
FRESA HELICOIDAL Ø2.35X70MM
(FHZ 2370)



55 **DRILL HELICAL Ø2.5X70MM**
FRESA HELICOIDAL Ø2.5X70MM
(FHZ 2570)



56 **DRILL HELICAL Ø2.8X70MM**
FRESA HELICOIDAL Ø2.8X70MM
(FHZ 2870)



57 **DRILL HELICAL Ø3.2X70MM**
FRESA HELICOIDAL Ø3.2X70MM
(FHZ 3270)



58 **DEPTH PROBE NARROW**
SONDA DE PROFUNDIDADE ESTREITA
(SOPZE)



59 **OSTEOTOME 01**
OSTEOTOMO 01
(OST 01)



60 **OSTEOTOME 02**
OSTEOTOMO 02
(OST 02)

5. USE OF DRILLS ACCORDING TO BONE TYPE

The Beyond Full Arch kit features two clear visual guides: the dotted line for soft bone and the solid line for hard bone. Just follow the line that matches your case.

6. DRILL MARKINGS

All surgical drills included in this system are externally irrigated and designed to be used with continuous sterile irrigation.

The recommended speed is 1200 rpm for lance and 2.0 mm helical drills (optional), and 800 rpm for the sequential tapered drills.

7. LANCE DRILL Ø2.0MM

Made of stainless surgical steel with DLC coating, this instrument is used to perforate the surgical socket in the maxillary ridge, breaking through the cortical bone crest to allow safe and deviation-free access for the following drills in the system.

The drill has a lance-shaped tip, starting at Ø1.8 mm and expanding to Ø2.0 mm as the shaft transitions to parallel walls. Its total length is 37.20 mm, with 22.0 mm of working area.

- Maximum rotation speed: 1200 RPM
- Laser markings: 7.0 mm to 18.0 mm
- Position the drill and begin perforation with slow, intermittent movements
- Do not perform lateral movements during drilling, as this may damage the socket and prevent implant placement.
- Use abundant and continuous irrigation.

Code: FRL 20

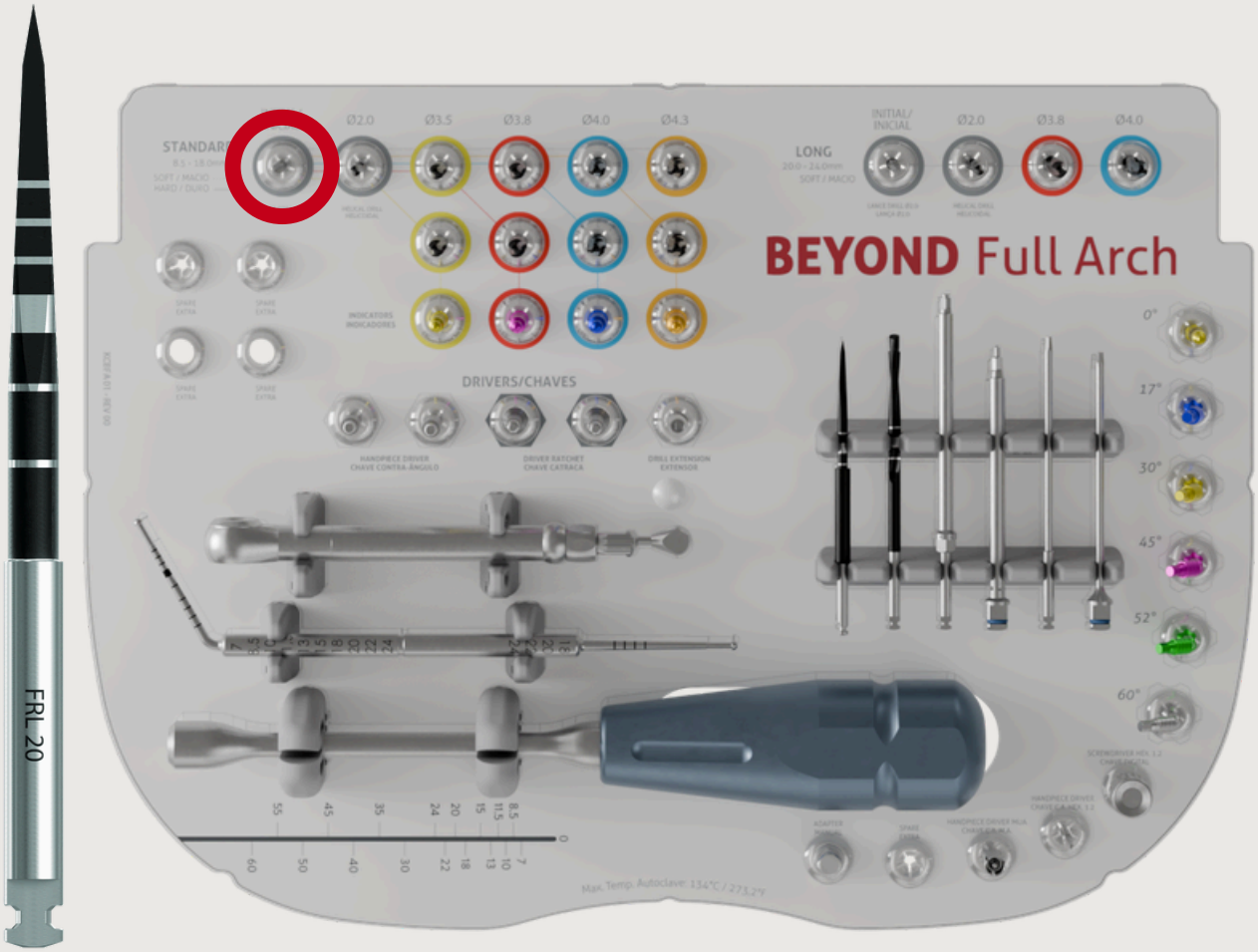

8. HELICAL DRILL Ø2.0MM

Manufactured from surgical stainless steel with a parallel helical profile, high cutting efficiency, and DLC coating to reduce friction with the bone, this instrument is used for the initial drilling of the osteotomy, creating a safe path for the following system drills without causing bone overheating.

- Maximum rotation speed: 1200 RPM
- Laser markings: 7.0 mm to 18.0 mm
- Start the drill rotation before entering the surgical site initiated by the lance drill. Use slow, intermittent movements under heavy irrigation
- Do not perform lateral movements during drilling, as this may interfere with the cylindrical shape of the osteotomy, potentially damaging the site and preventing proper implant placement
- Use abundant and continuous irrigation

Code: FRH 20

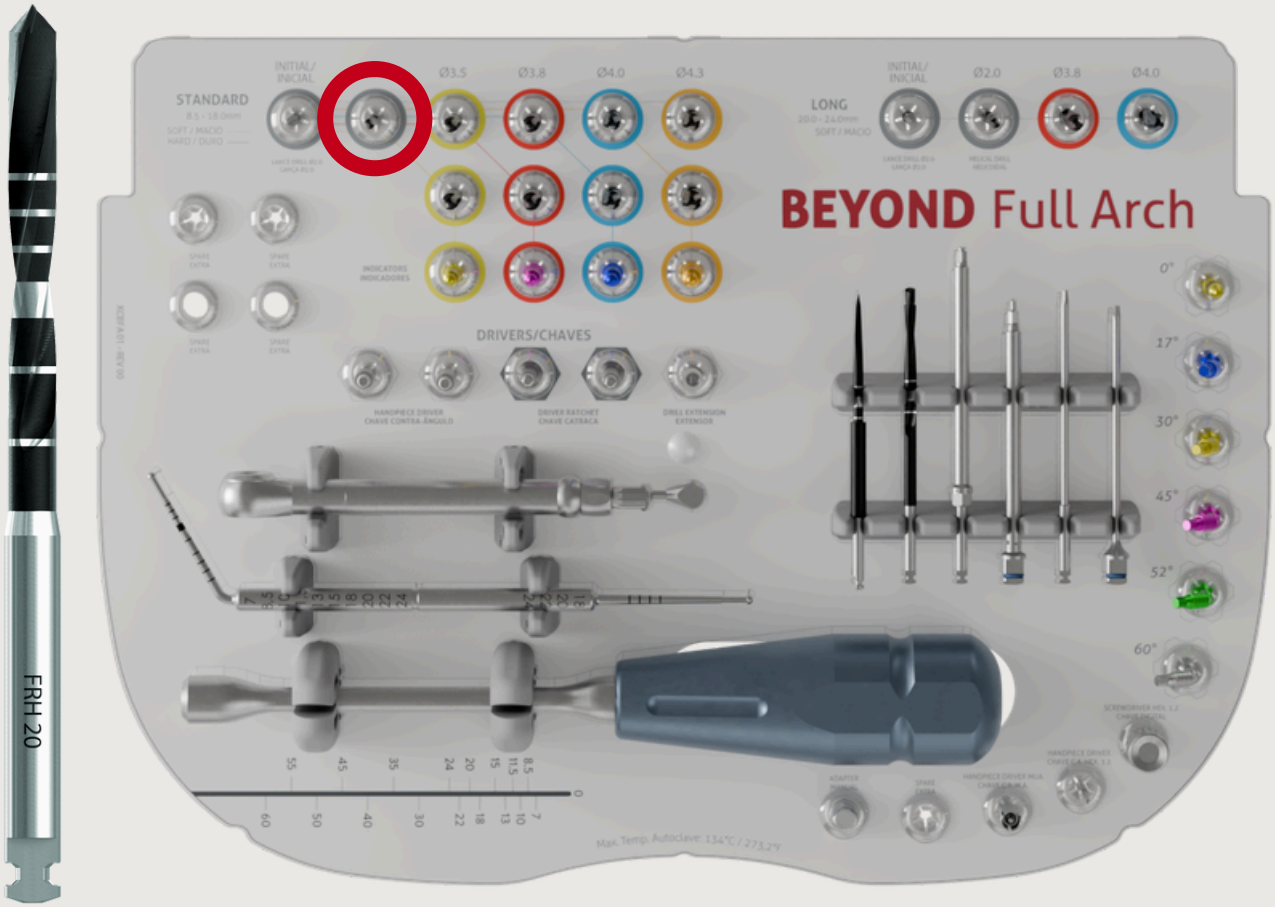

9. CONICAL DRILLS SOFT

The conical drills in the Beyond Full Arch Kit are divided into two types: for Soft bone and Hard bone.

The drills for Soft bone are positioned in the first row of the kit and are available in the following diameters: 3.5 mm, 3.8 mm, 4.0 mm and 4.3 mm.

- Maximum rotation speed: 800 RPM
- Laser markings: 7.0 mm to 18.0 mm
- Position the drill and begin drilling with slow, intermittent movements
- Do not perform lateral movements during drilling, as this may damage the osteotomy and prevent implant placement
- Use abundant and continuous irrigation

Codes: FRCV 35S, FRCV 38S, FRCV 40S and FRCV 43S

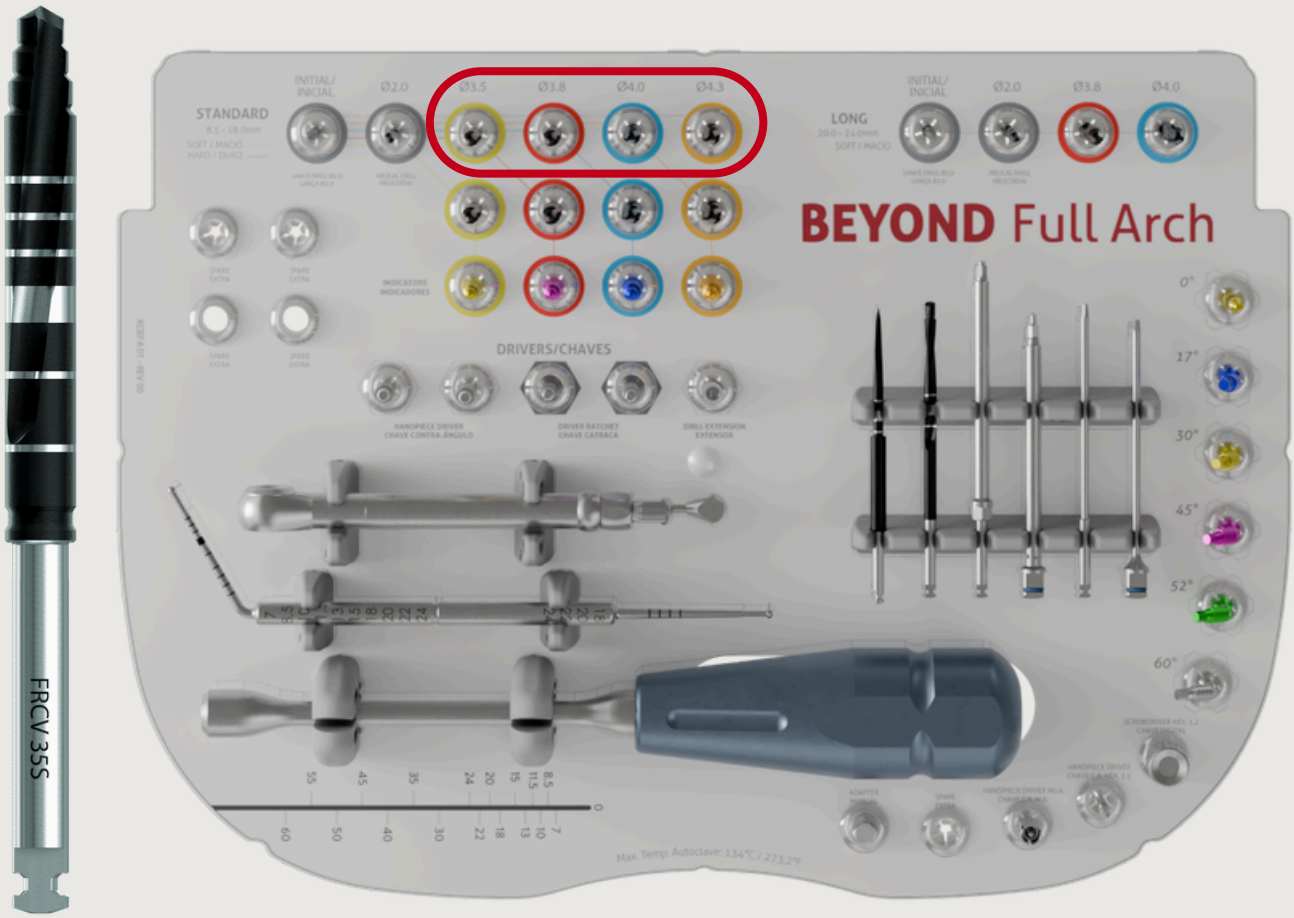

10. CONICAL DRILLS HARD

The conical drills for hard bone in the Beyond Full Arch kit are located in the second row and are available in the following diameters: 3.5 mm, 3.8 mm, 4.0 mm and 4.3 mm.

To differentiate them, each drill is marked with the letter 'H' and features a black mark on the latch, indicating its specific use for hard bone and assisting in proper selection based on bone density.

- Maximum rotation speed: 800 RPM
- Laser markings: 7.0 mm to 18 mm
- Position the drill and begin drilling with slow, intermittent movements
- Do not perform lateral movements during drilling, as this may damage the osteotomy and prevent implant placement
- Use abundant and continuous irrigation

Codes: FRCV 35H, FRCV 38H, FRCV 40H and FRCV 43H

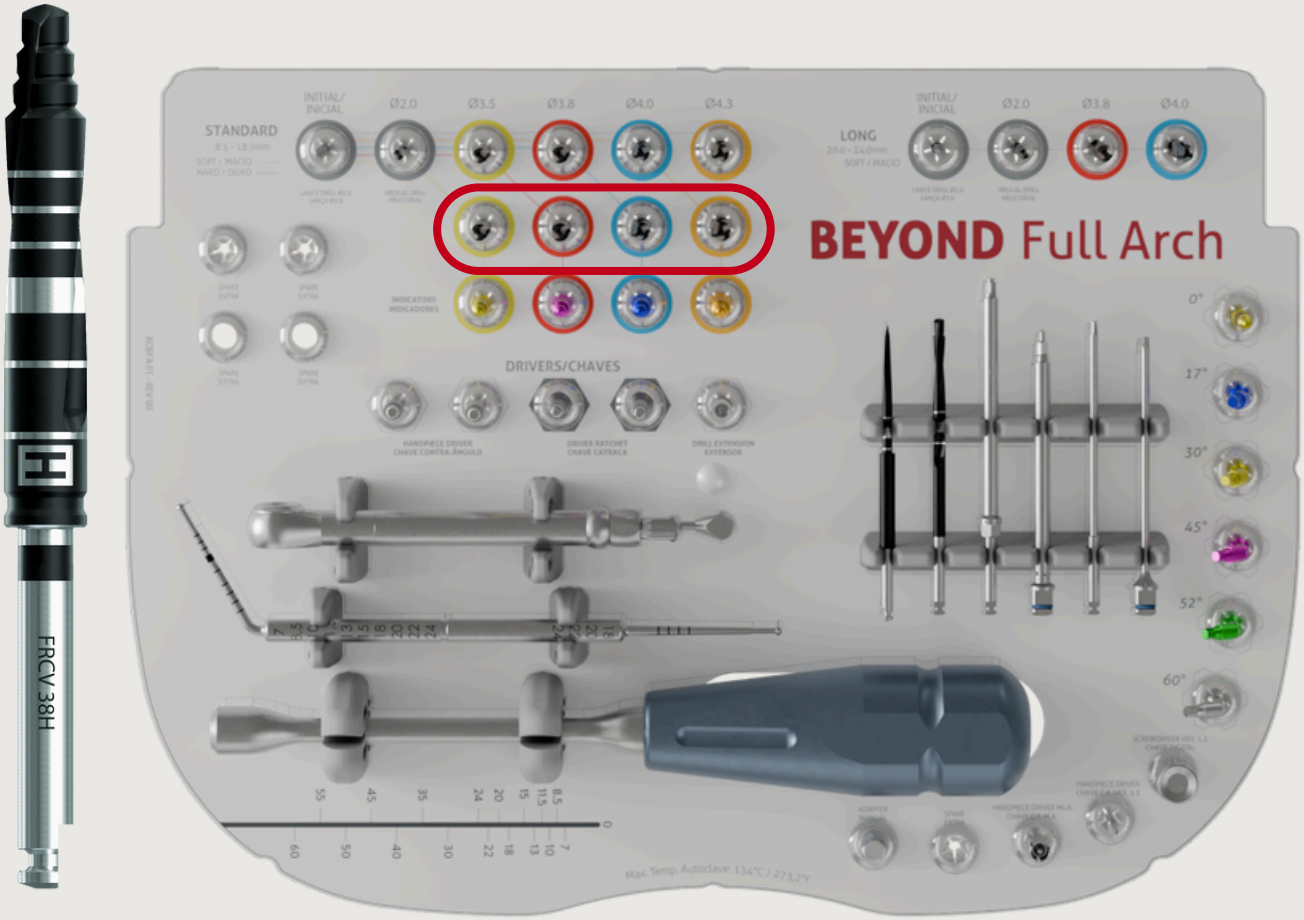

11. STRAIGHT DIRECTION INDICATORS

The Beyond Full Arch surgical kit includes straight direction indicators to support parallelism during surgery.

The kit also includes five straight indicators corresponding to implant diameters of 3.5 mm, 3.8 mm, 4.0 mm and 4.3 mm. These tools are used to verify parallelism and simulate the final positioning of multiple implants before actual placement.

- Non-cutting instruments use only for orientation
- Must be sterilized before use
- Do not apply rotational force or pressure

Codes: ID 35, ID 38, ID 40 and ID 43.



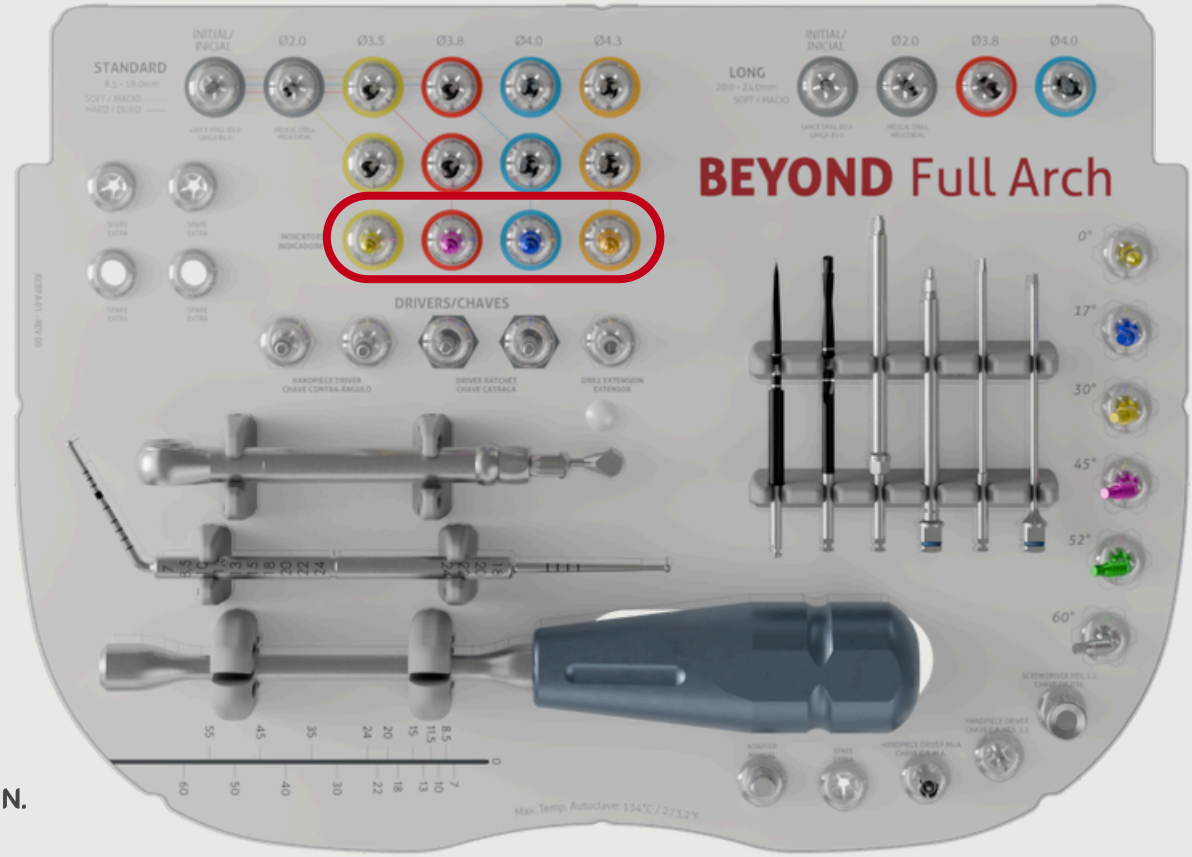

12. LANCE DRILL Ø2.0MM LONG

Made of stainless surgical steel with DLC coating, this long drill is designed for use in extended-length osteotomies, particularly in the posterior maxilla region. It perforates the surgical socket by breaching the cortical crest, allowing safe and accurate access for the sequential long drills in the system.

The drill features a lance-shaped tip, starting at Ø1.8 mm and expanding to Ø2.0 mm as it transitions into parallel walls. It has a total length of 45.5 mm, with 30.30 mm of active working area.

- Maximum rotation speed: 1200 RPM
- Laser markings: 18.0 mm to 24.0 mm
- Position the drill and begin perforation with slow, intermittent movements
- Avoid lateral movements during drilling, as this may damage the socket and compromise implant placement
- Use abundant and continuous irrigation

Code: FRLL 20



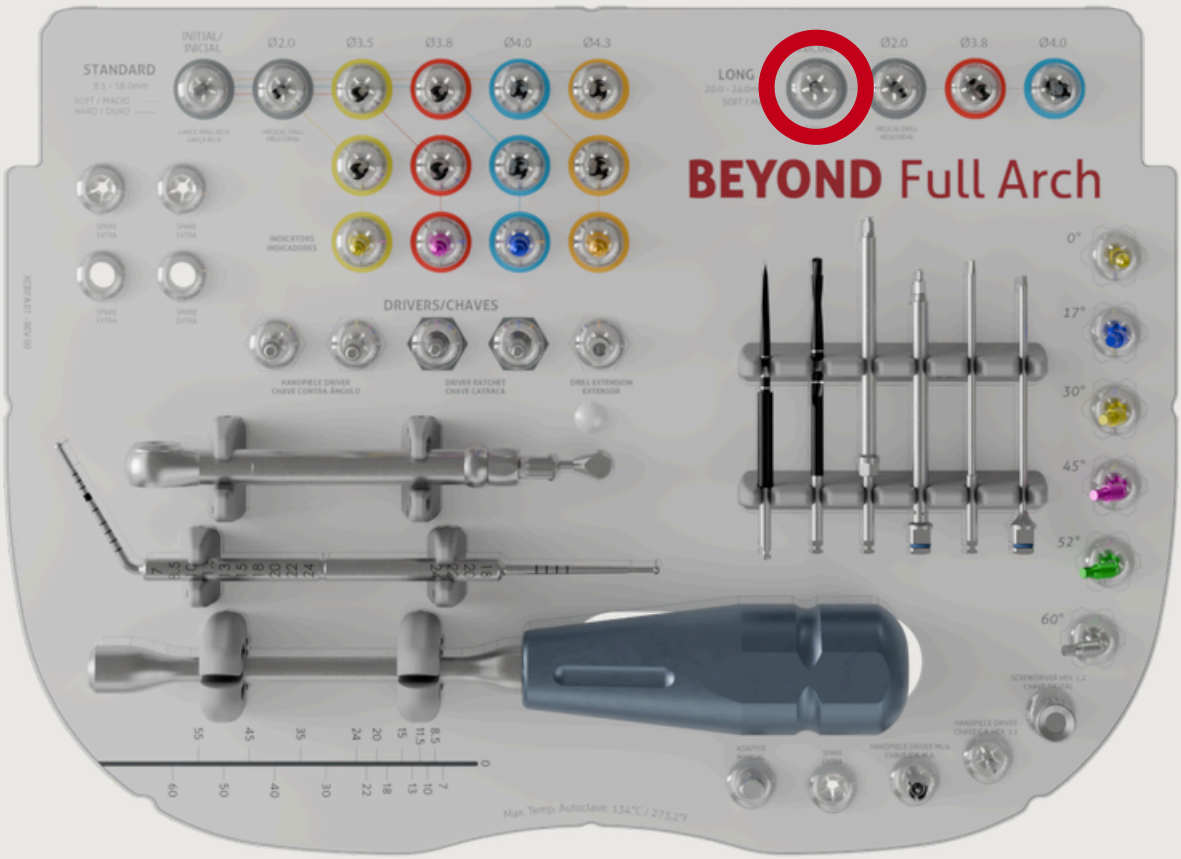

13. HELICAL DRILL Ø2.0MM LONG

Manufactured from surgical stainless steel with a parallel helical profile, high cutting efficiency, and a DLC coating to reduce friction with the bone, this long helical drill is used for the initial preparation of extended osteotomies. It creates a safe and thermally controlled path for the subsequent long drills in the system.

- Maximum rotation speed: 1200 RPM
- Laser markings: 18.0 mm to 24.0 mm
- Start the drill rotation before entering the osteotomy previously initiated by the long lance drill
- Perform slow, intermittent movements under abundant irrigation
- Do not perform lateral movements during drilling, as this may compromise the cylindrical shape of the osteotomy and affect implant placement
- Use abundant and continuous irrigation

Code: FRHL 20



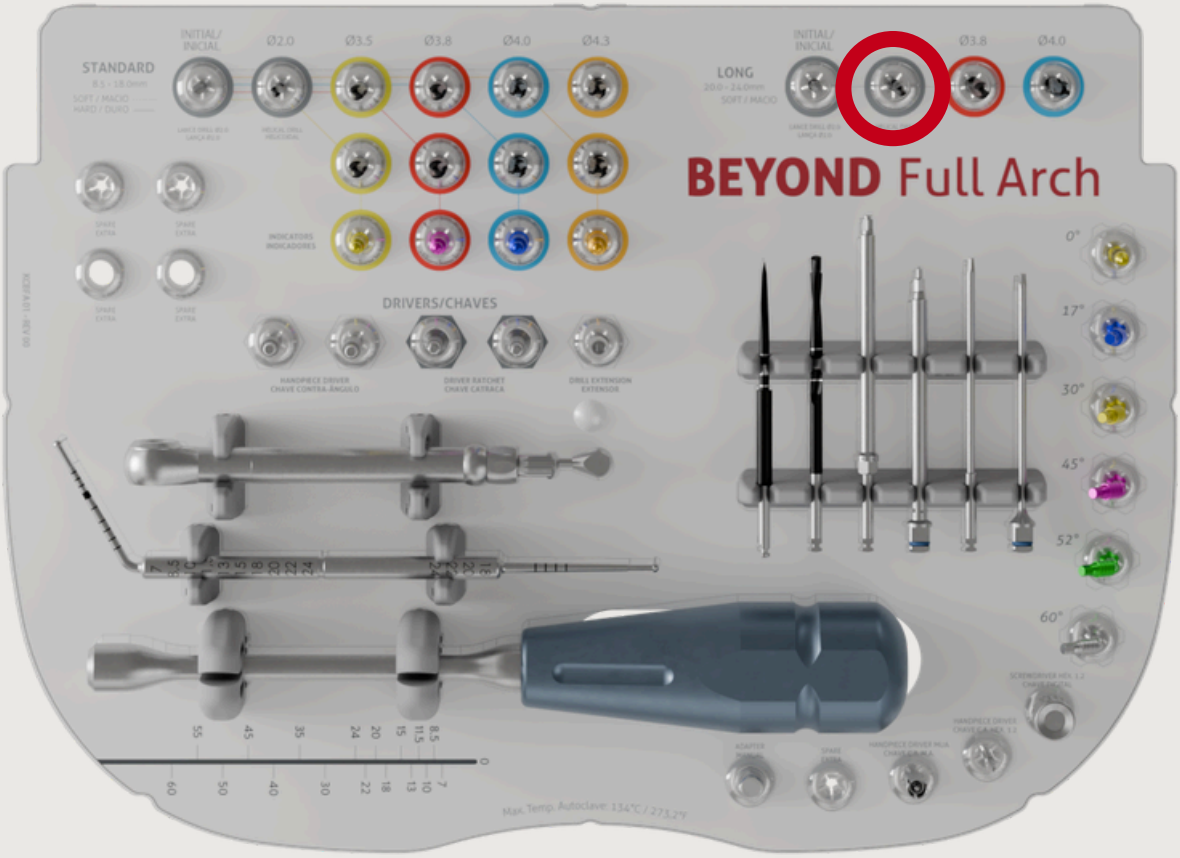

14. CONICAL DRILLS LONG

The conical drills Long are available in the following diameters: 3.8 mm and 4.0 mm.

- Maximum rotation speed: 800 RPM
- Laser markings: 18.0 mm to 24.0 mm
- Position the drill and begin drilling with slow, intermittent movements
- Do not perform lateral movements during drilling, as this may damage the osteotomy and prevent implant placement
- Use abundant and continuous irrigation

Codes: FRCVL 38 and FRCVL 40



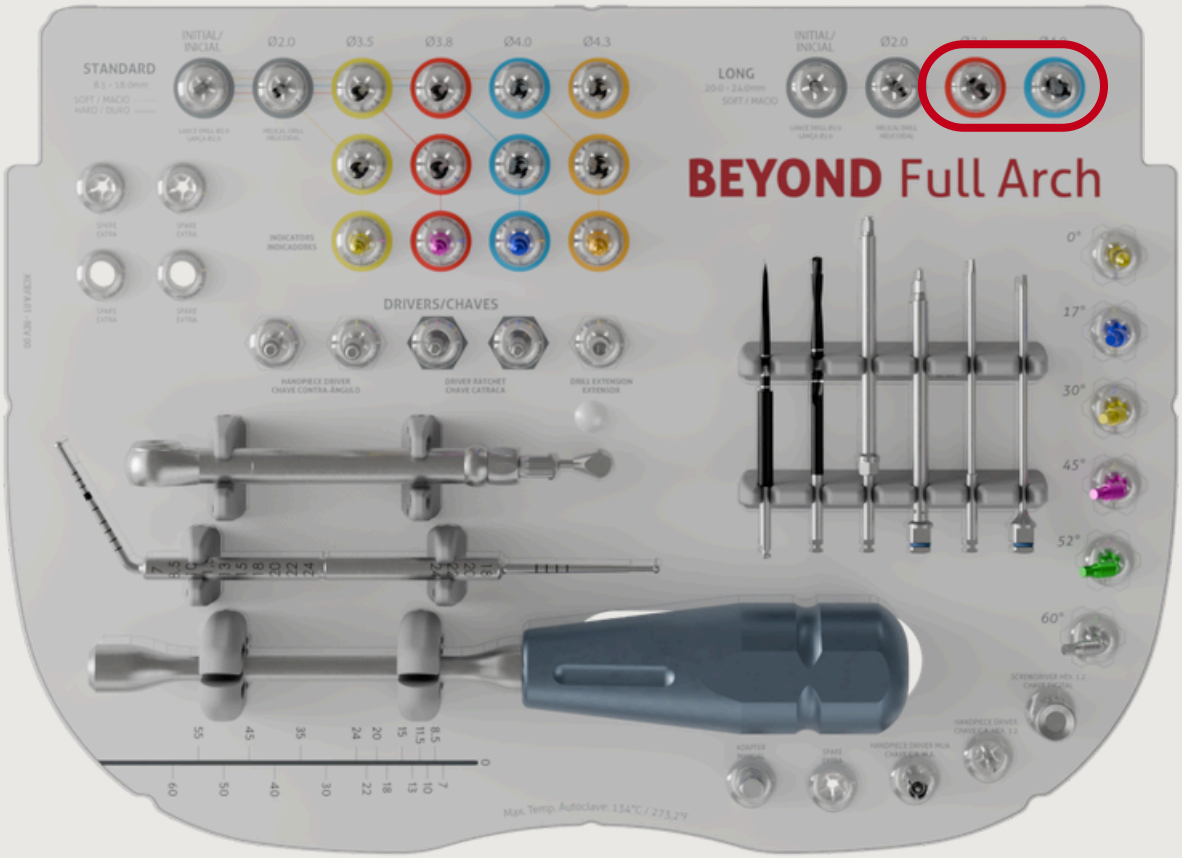



15. HANDPIECE DRIVER IMP. MT 16° SHORT

Manufactured from surgical stainless steel, it is indicated for situations with reduced interocclusal space or when closer control over the insertion area is required.

The short contra-angle driver offers improved ergonomics and stability in cases with limited access, while maintaining efficiency and precision during implant placement.

Code: CTMT 01C



16. HANDPIECE DRIVER IMP. MT16° LONG

Manufactured from surgical stainless steel, it is designed to facilitate implant placement in hard-to-reach areas, such as posterior regions or cases with thick gingival tissue.

The long contra-angle driver provides greater reach and visibility during the procedure, ensuring clinician comfort and precision in guiding the implant to its final position.

Code: CTMT 01L

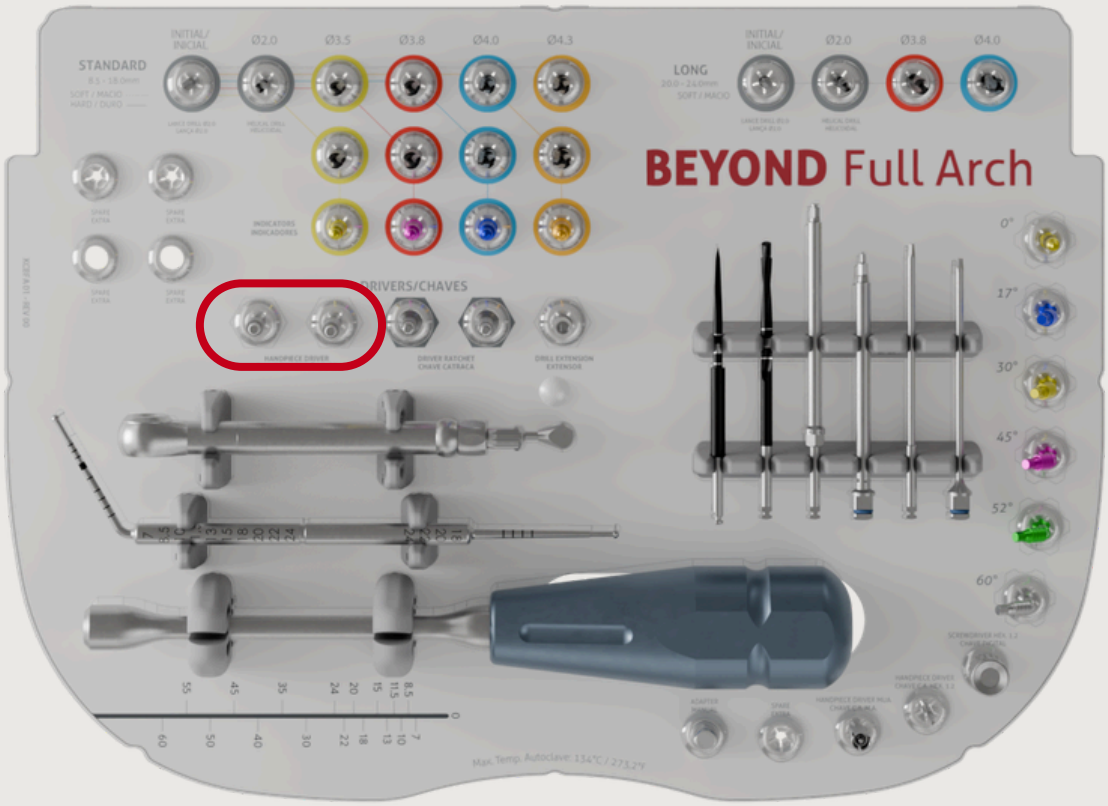



17. RATCHET DRIVER IMP. MT 16° SHORT

Used for implant placement in areas with limited access, such as posterior regions or cases with restricted mouth opening.

Code: CCMT 01C



18. RATCHET DRIVER IMP. MT 16° LONG

Indicated for implant placement in easily accessible regions, providing greater reach and control during the procedure.

Code: CCMT 01L



19. DRILL EXTENSOR

Manufactured from surgical stainless steel, the Drill Extensor is used to increase the reach of drills during osteotomy preparation, especially in posterior regions or areas with limited access. Its stainless steel construction ensures strength, stability, and safety during use, allowing the clinician to maintain control and precision even in situations with restricted space or depth.

Code: EXFN 03

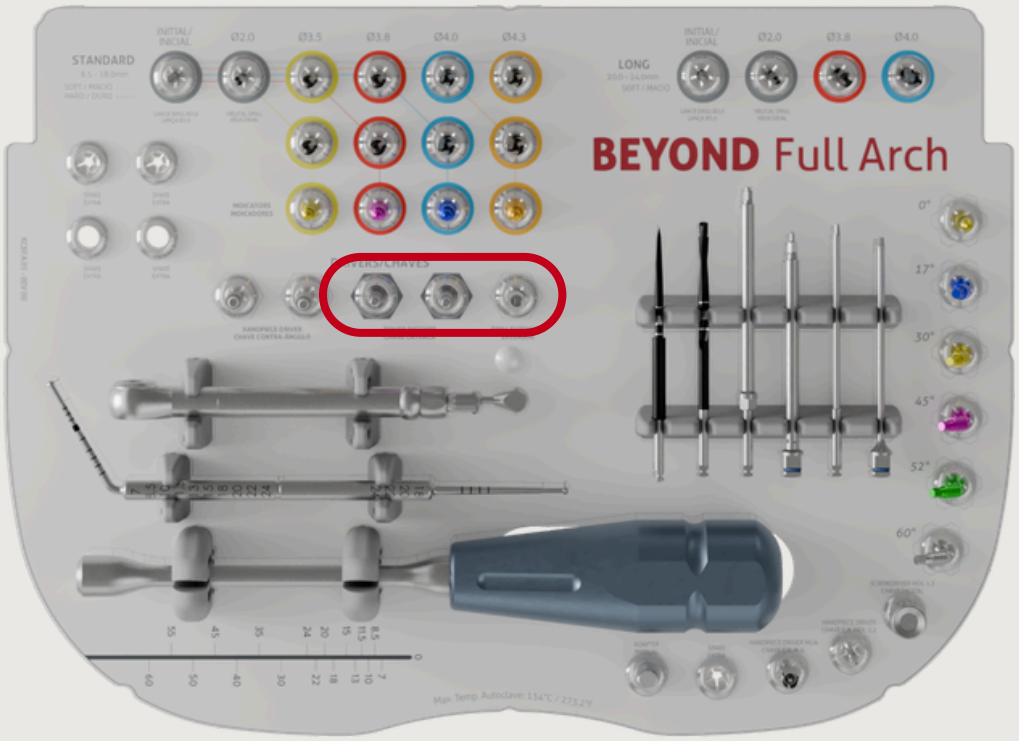

20. DRILL LANCE QUAD Ø2.0MM

Made from surgical stainless steel with DLC coating, this instrument is intended for initiating the osteotomy in the posterior maxilla. Its lance-shaped tip begins at Ø1.8 mm and enlarges to Ø2.0 mm as it transitions to parallel walls, providing controlled and deviation-free access for the subsequent drills in the system.

The drill incorporates an enlarged-diameter segment along its shaft. This segment serves as a clear visual depth reference, indicating that drilling must not continue along the entire length of the instrument. It helps the clinician control the drilling depth and avoid unintended over-advancement.

- Maximum rotation speed: 1200 rpm
- Laser markings: 18.0 mm to 24.0 mm
- Position the drill and initiate perforation using slow, intermittent movements.
- Avoid lateral movements during drilling, as they may damage the osteotomy and compromise implant placement.
- Use abundant and continuous irrigation.

Code: FRLQ 2045

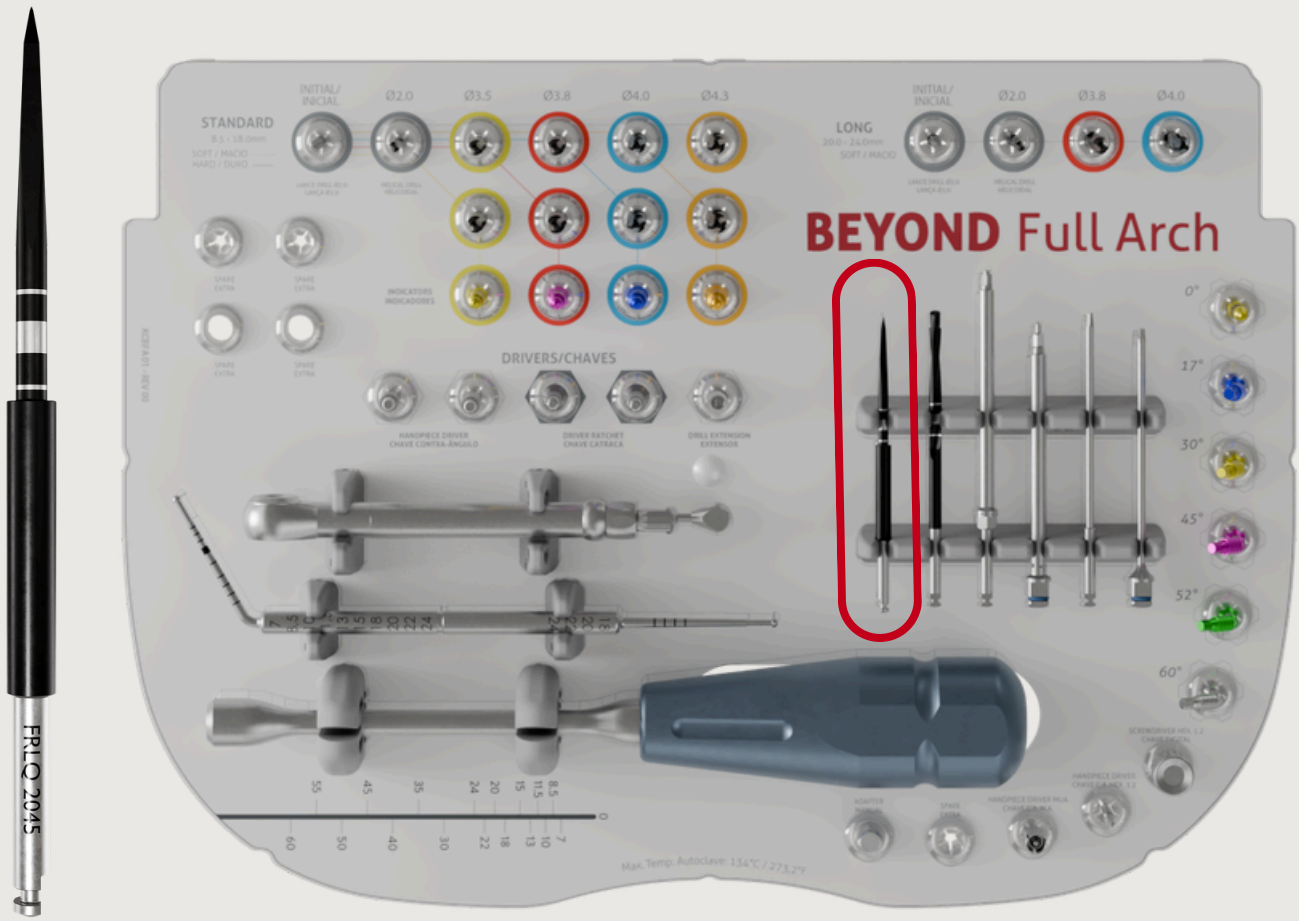

21. DRILL CONICAL Ø2.5MM

Made of surgical stainless steel with DLC treatment, this instrument is used for drilling the surgical socket of the maxillary ridge, breaking through the cortical bone crest for safe passage and without lateral deviation for the other drills in the system. The bur has a cylindrical tip with a diameter of Ø2.0 mm, designed to fit perfectly into the path created by the lance bur, advancing to Ø2.5 mm as the walls become parallel, with a total length of 57.5 mm, 42 mm of which is the working area.

- Maximum Rotation: 800 RPM;
- Laser Marking: 18.0 mm to 24.0 mm
- Position the bur and begin drilling with slow and intermittent movements;
- Do not make lateral movements during drilling, as this may damage the socket and prevent the implant from being installed;
- Use abundant and continuous irrigation.

Code: FHE 25P

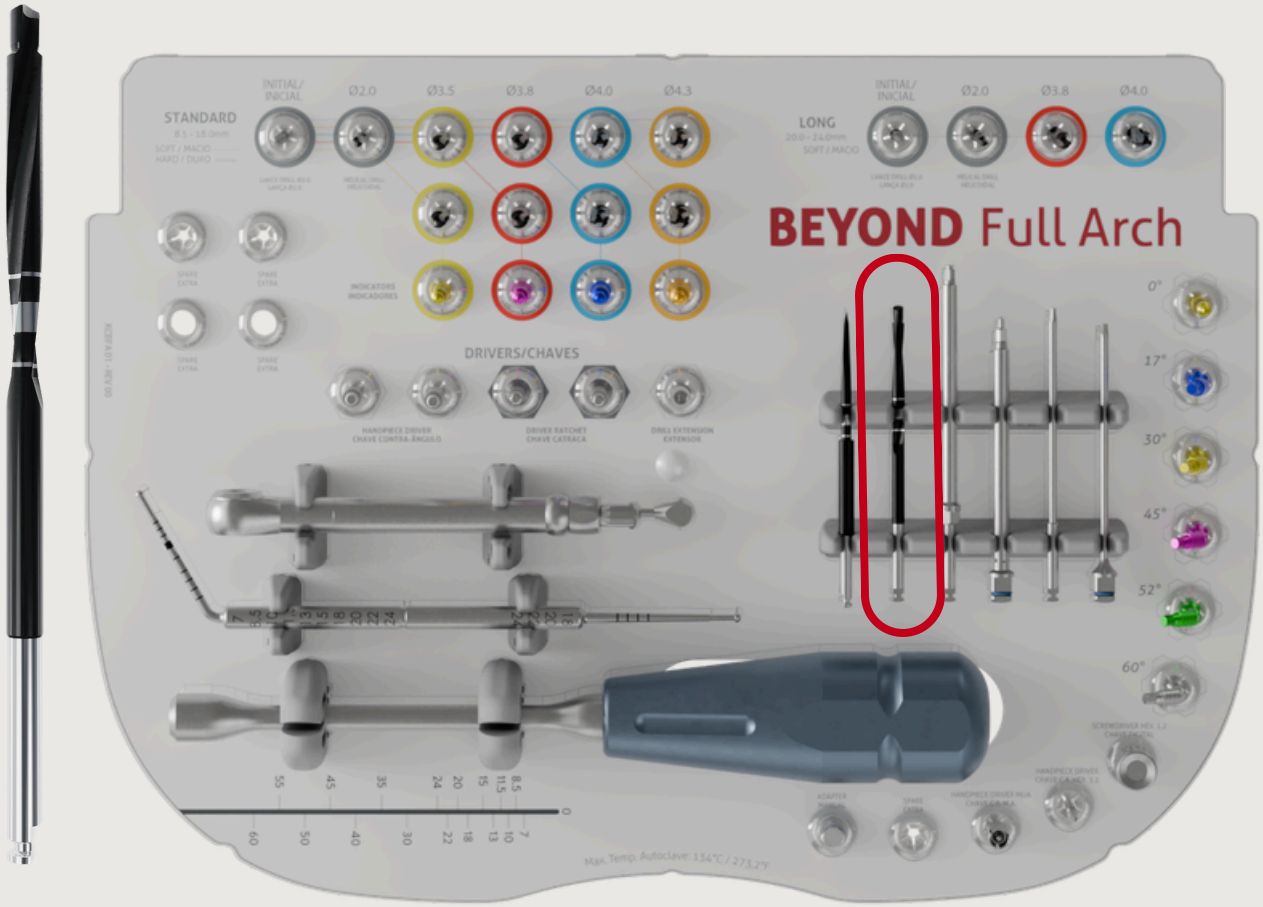

22. DRIVER HANDPIECE IMP. PTG

Made of surgical stainless steel, this key is used to capture the implant and guide it to the insertion site, using the contra-angle handpiece.

- Position the key over the implant insertion key, applying light pressure;
- For better positioning, gently rotate the packaging with your hand so that the key fully fits;
- Carefully remove the implant from the packaging and ensure the key is fully attached to the insertion key;
- Take the assembled implant unit to the previously prepared surgical site and begin implant insertion at low speed (20 RPM)

Code: CTMPTG 01

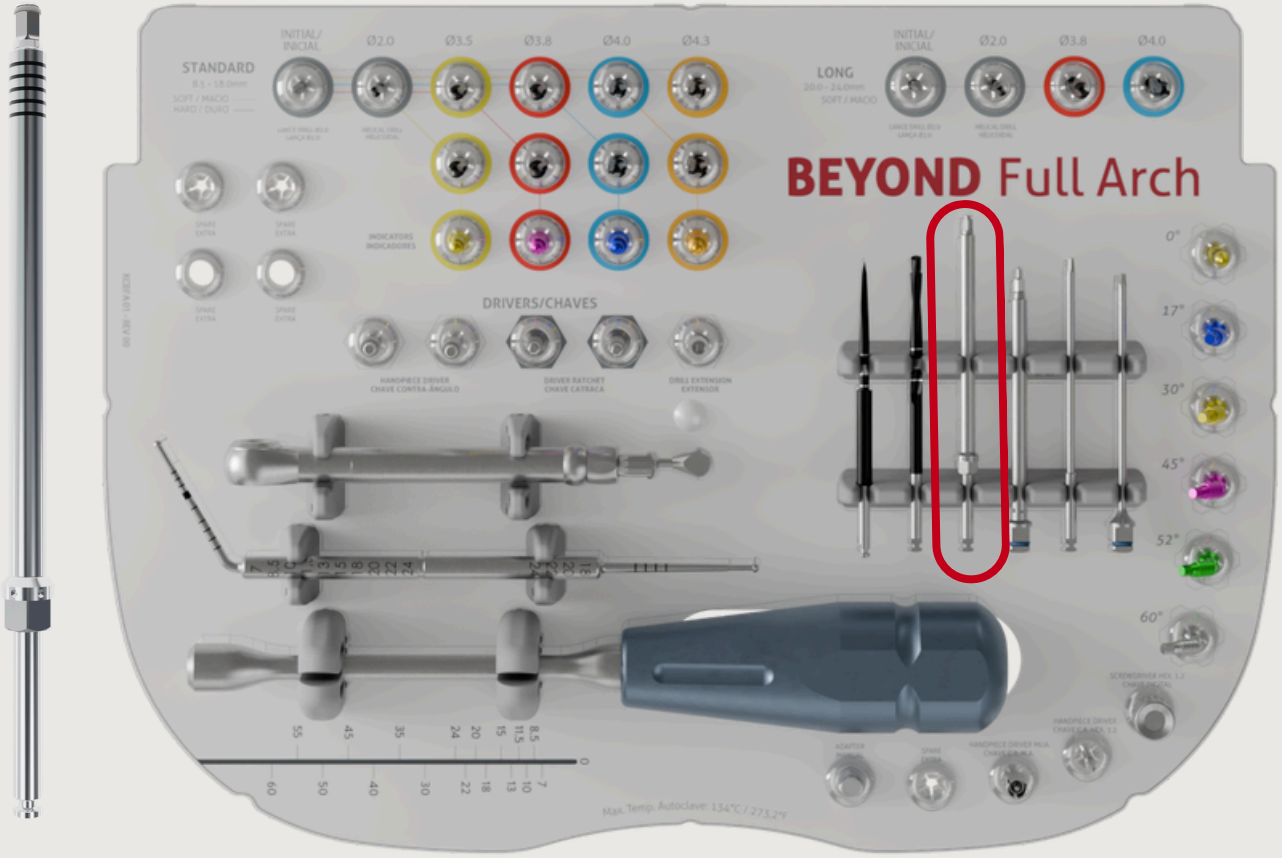

23. DRIVER IMP. PTG

Made of surgical stainless steel, this key is used to manually complete the installation of the PTG implant with the ratchet and is adapted to the implant's internal connection

Code: CCMPTG 01

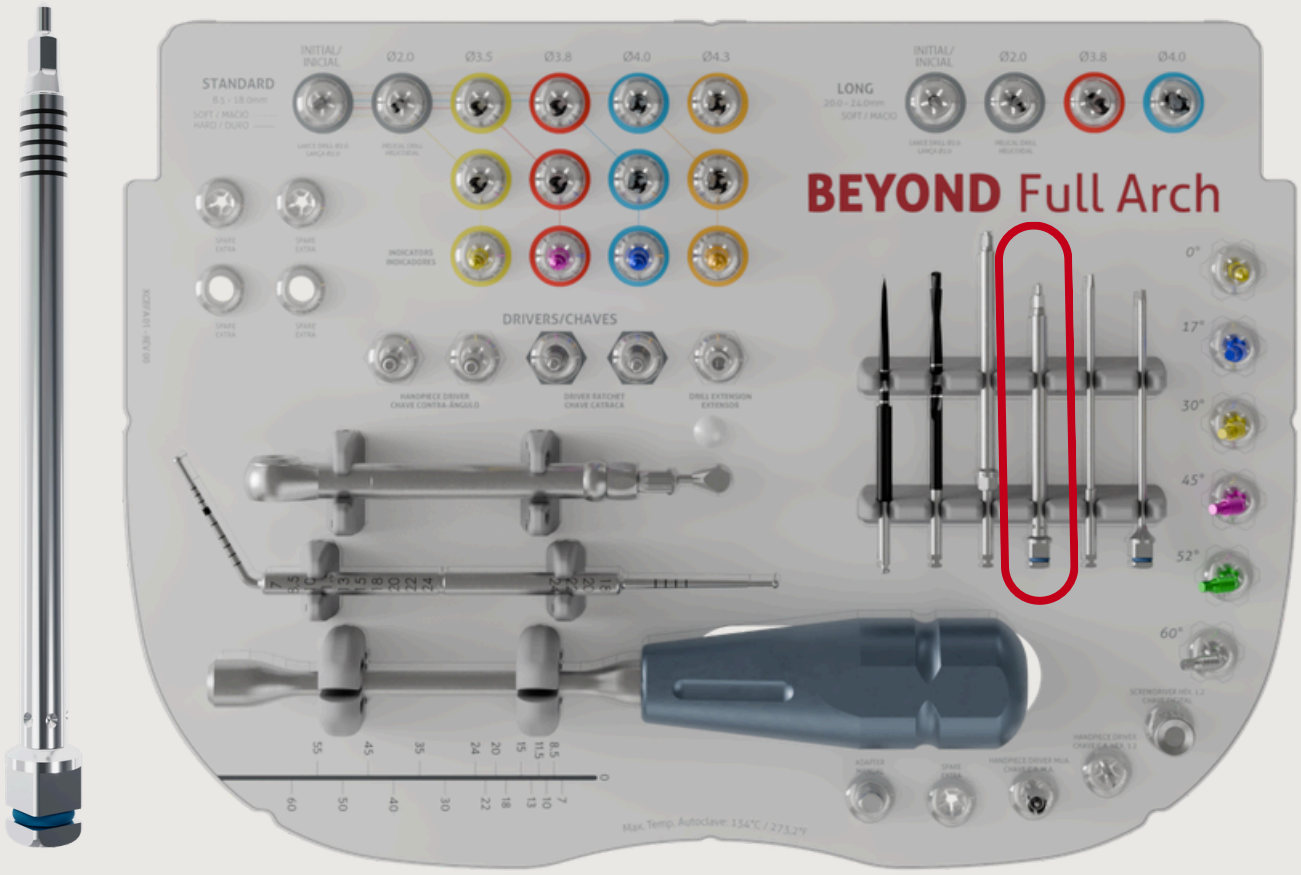

24. DRIVER HANDPIECE HEX.1.2MM

Made of surgical stainless steel. This key is used to transport and insert prosthetic components with a contra angle

Code: CTH 1257

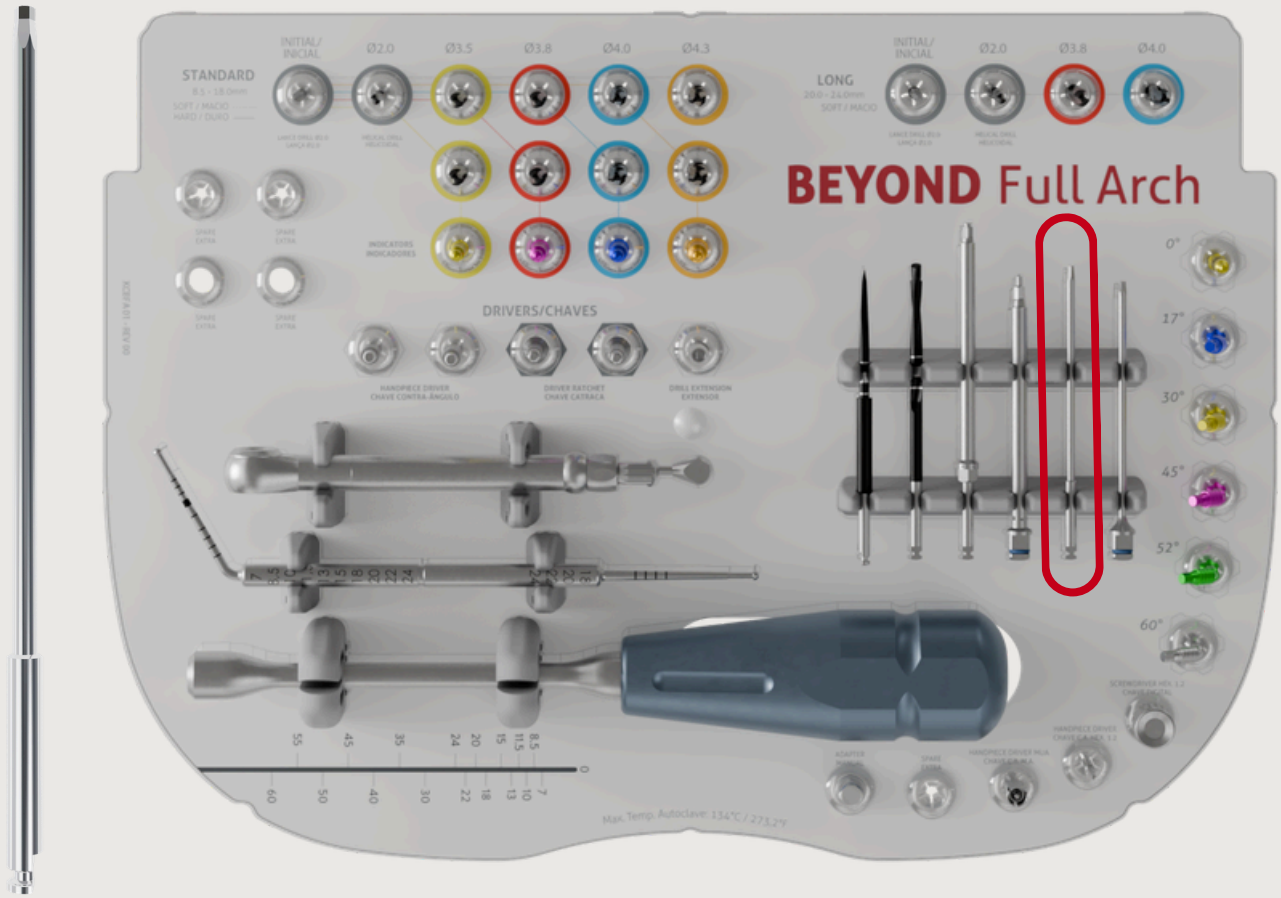

25. DRIVER RATCHET HEX. 1.2MM EXT.LONG SPE.

Made of surgical stainless steel, this key is used to manually transport and insert prosthetic components with a ratchet.

Code: CDHC 54

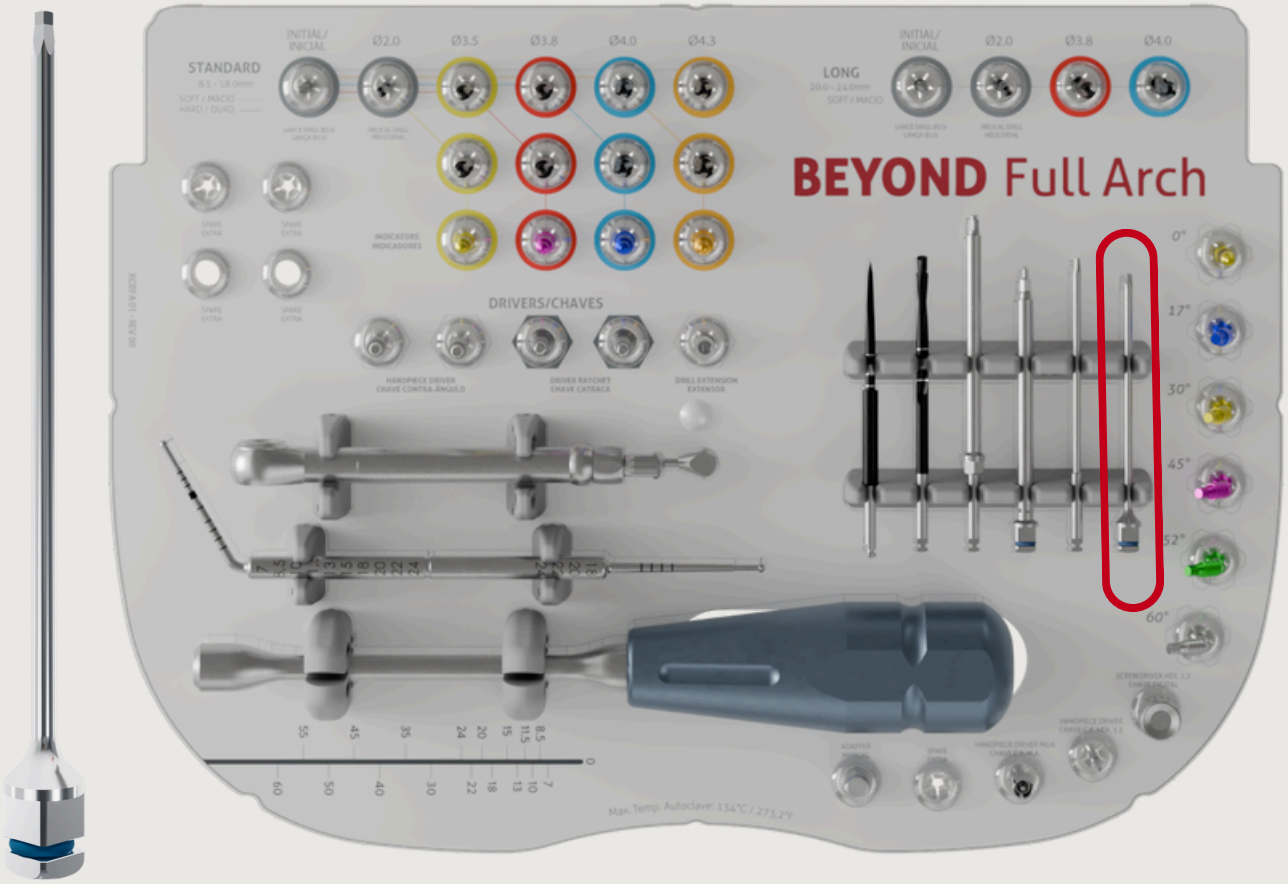

26. GENGIVAL HEIGHT MT 16°

Used to assess the thickness of the peri-implant soft tissue and assist in selecting the ideal prosthetic component, the MT 16° transmucosal gauge was specially developed for systems with an internal angulation of 16°.

Code: MTCM 16

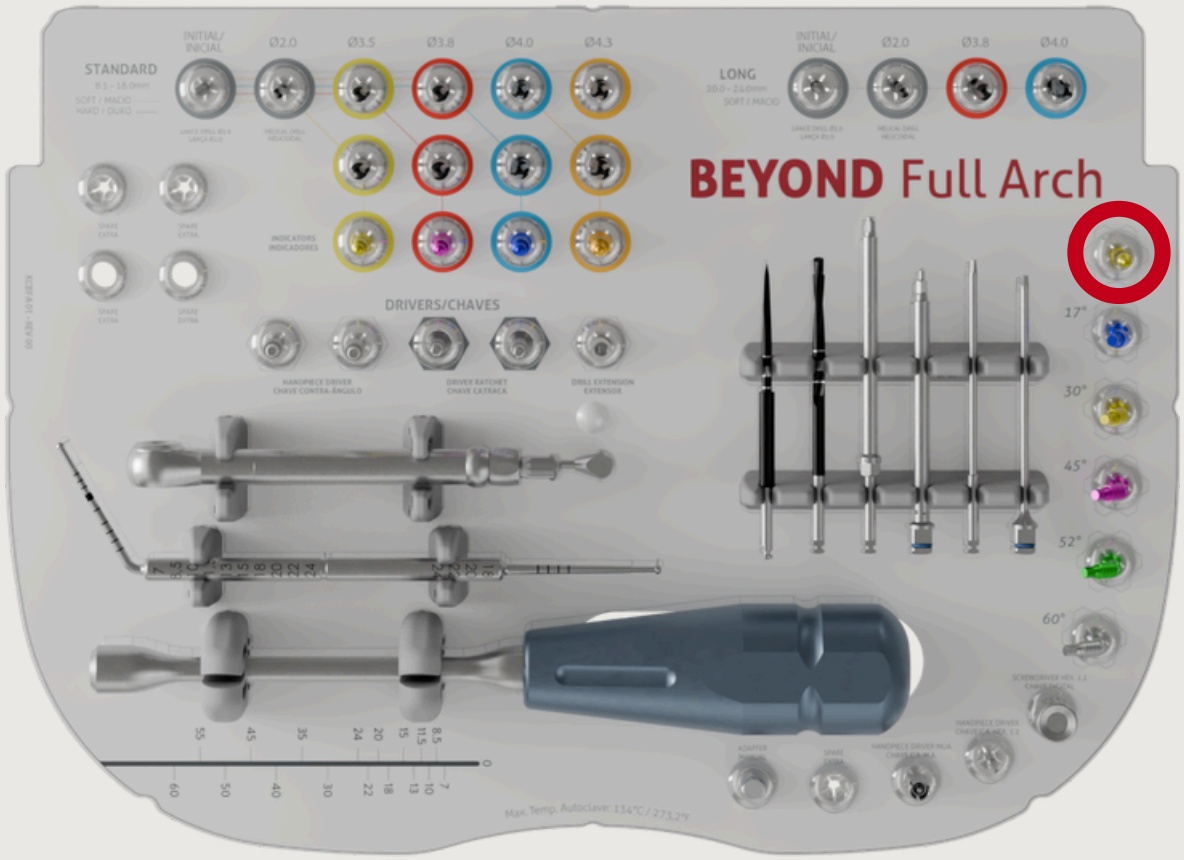



27. ANGLED DIRECTION INDICATORS

The Beyond Full Arch surgical kit includes angled direction indicators to support accurate implant angulation.

Three options are available (17°, 30°, 45°, 52° and 60°) designed to visually assist the clinician in verifying phrostetic component selection, especially in tilted or complex anatomical cases.

- Non-cutting instruments use only for orientation
- Must be sterilized before use
- Do not apply rotational force or pressure

Codes: IDA 17, IDA 30, IDA 45, IDA 52 and IDA 60

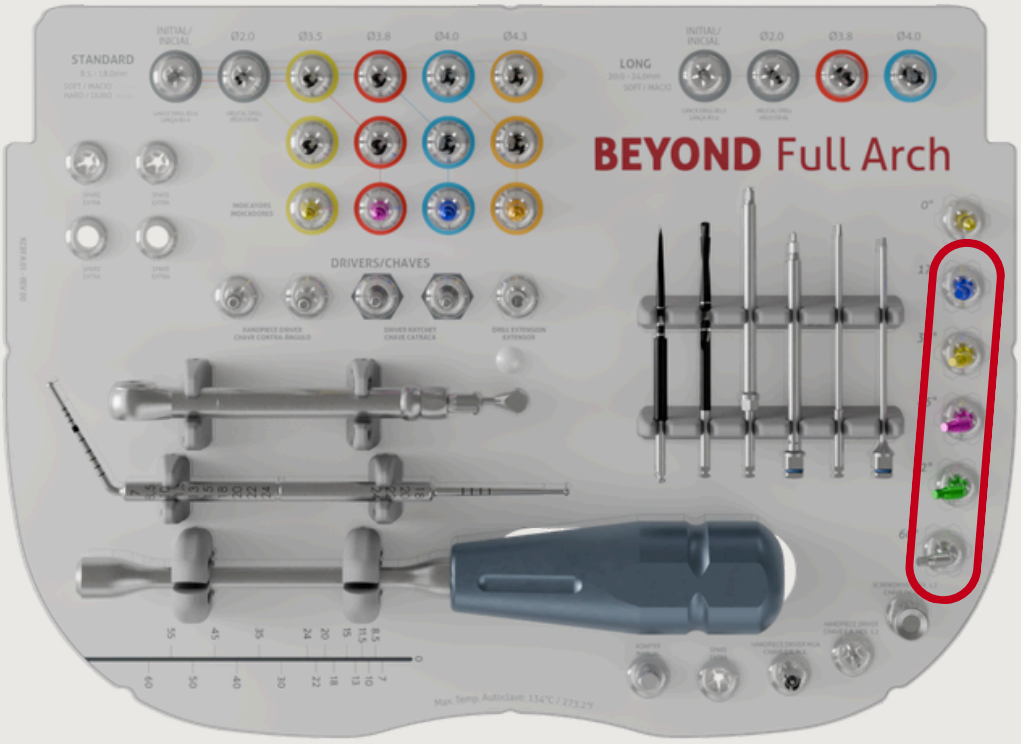



17° 30° 45° 52° 60°

28. DRIVER DIGITAL HEX.1.2 SHORT



Indicated for screws with a 1.2 mm hexagonal connection, commonly used in abutments and prosthetic screws.

It is intended for manual use and assists in adjustments and seating without applying torque.

Code: CDH 1220

29. DRIVER HANDPIECE HEX.1.2MM LONG



Manufactured from surgical stainless steel, it is designed to facilitate prosthetic screws or healing cap abutments placement in hard-to-reach areas, such as posterior regions or cases with thick gingival tissue.

The medium contra-angle driver provides extended reach and improved visibility during the procedure, ensuring clinician comfort and precision in guiding the implant to its final position.

Code: CTH 1230

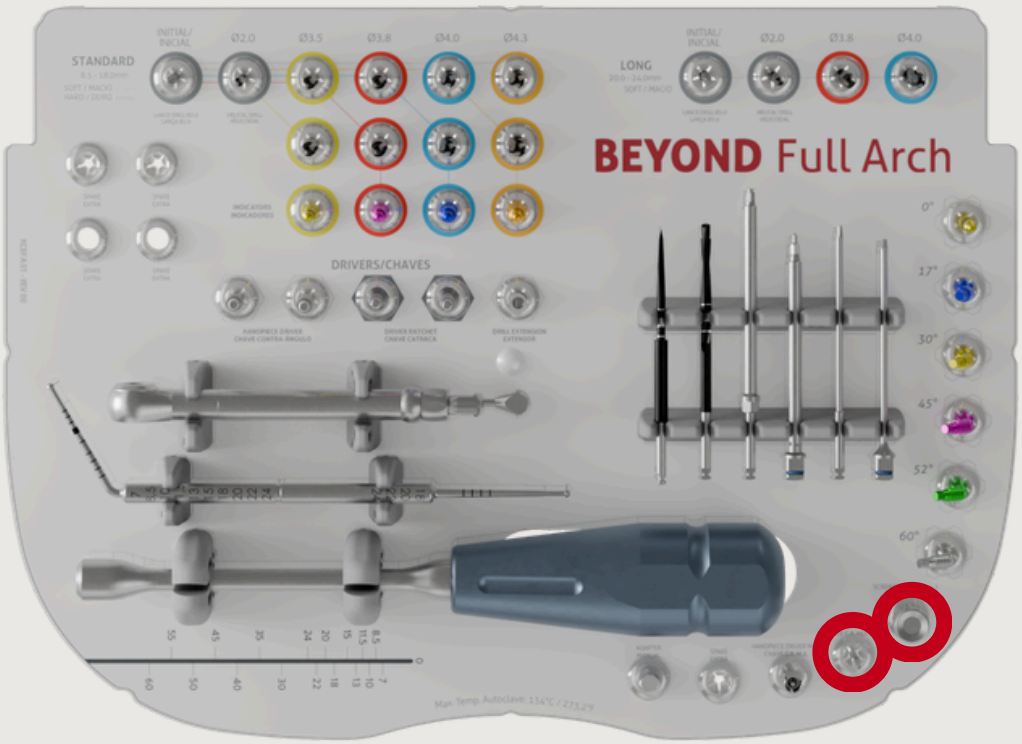

30. DRIVER HANDPIECE MINI ABUT. MEDIUM



Manufactured from surgical stainless steel, this medium-length contra-angle driver is designed for the installation of straight Mini Abutments.

Its medium length provides improved reach and visibility in hard-to-access areas, supporting controlled and precise seating of the component.

Use this driver with a contra-angle handpiece and apply a final installation torque of 20 N·cm.

Code: CTA 01M

31. DRIVER HANDPIECE MINI ABUT. MEDIUM

This ratchet adapter can be inserted into the connection located at the base of the Narrow Hand Driver (CMZE) after placement of the zygomatic implant, allowing the clinician to verify the final implant insertion torque.



Code: ACCM

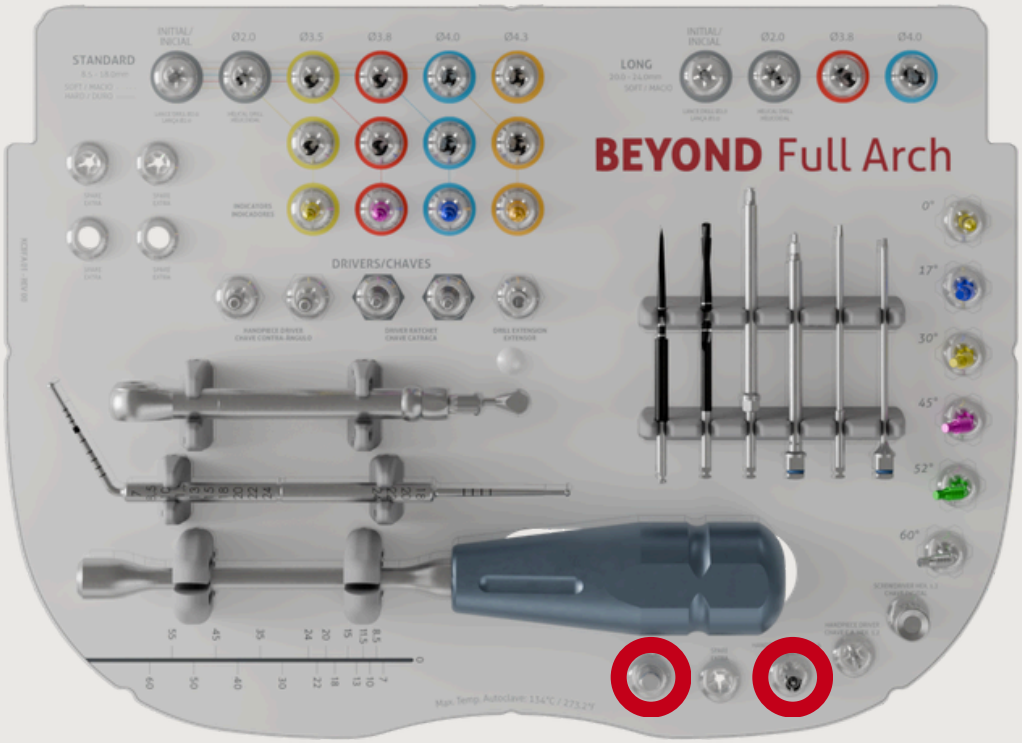

32. SURGICAL TORQUE RATCHET

Shaft Surgical torque wrench (range: 30–80 N·cm). Torque is measured continuously and simultaneously during implant placement through the shaft and torque markings.

Code: TMECC 02

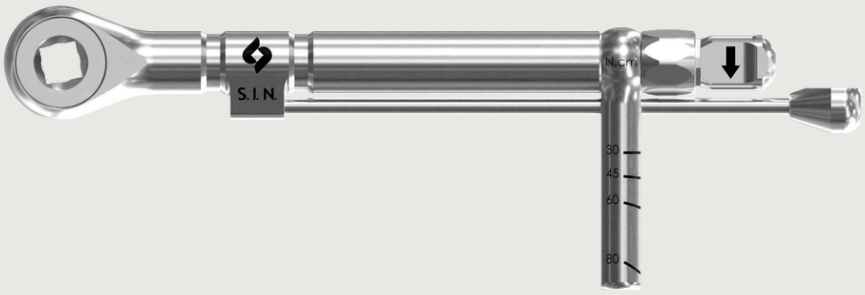

33. DEPTH PROBE MOD.03

Made of titanium, the depth rods aim to assist the worker in the exploratory probing of the freshly drilled cavity and guide the professional in the perforated length.

Code: SOP 03



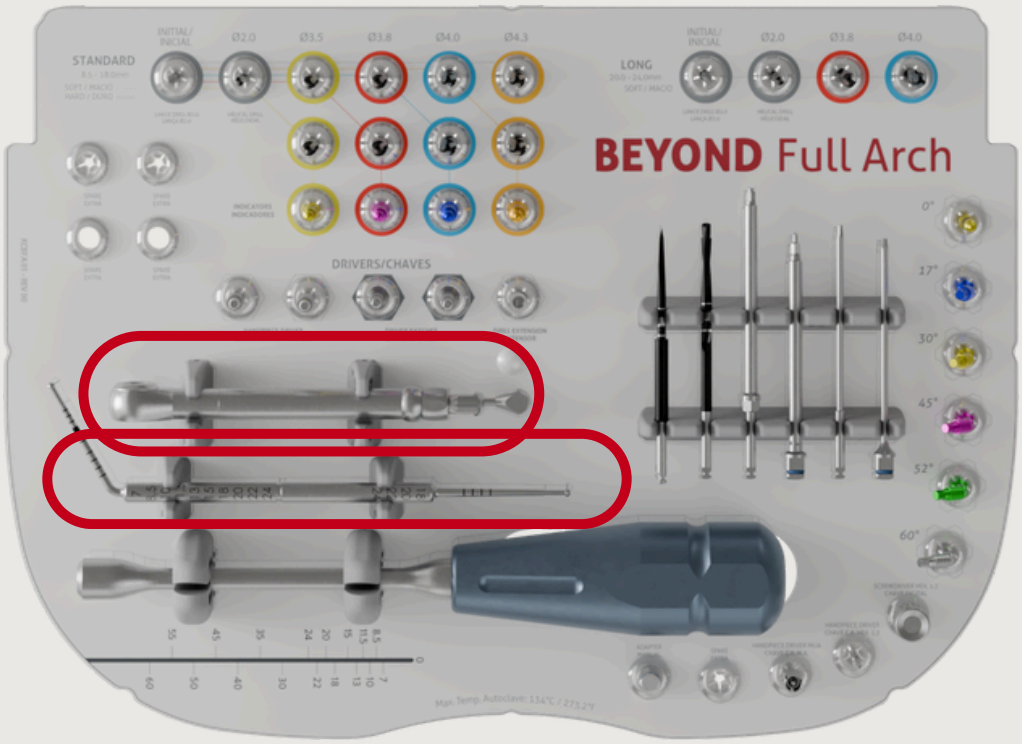

34. HAND DRIVER NARROW

Made from surgical stainless steel, the driver is used to be adapted to the implant capture driver and is used if the surgeon chooses manual insertion.

Code: CMZE

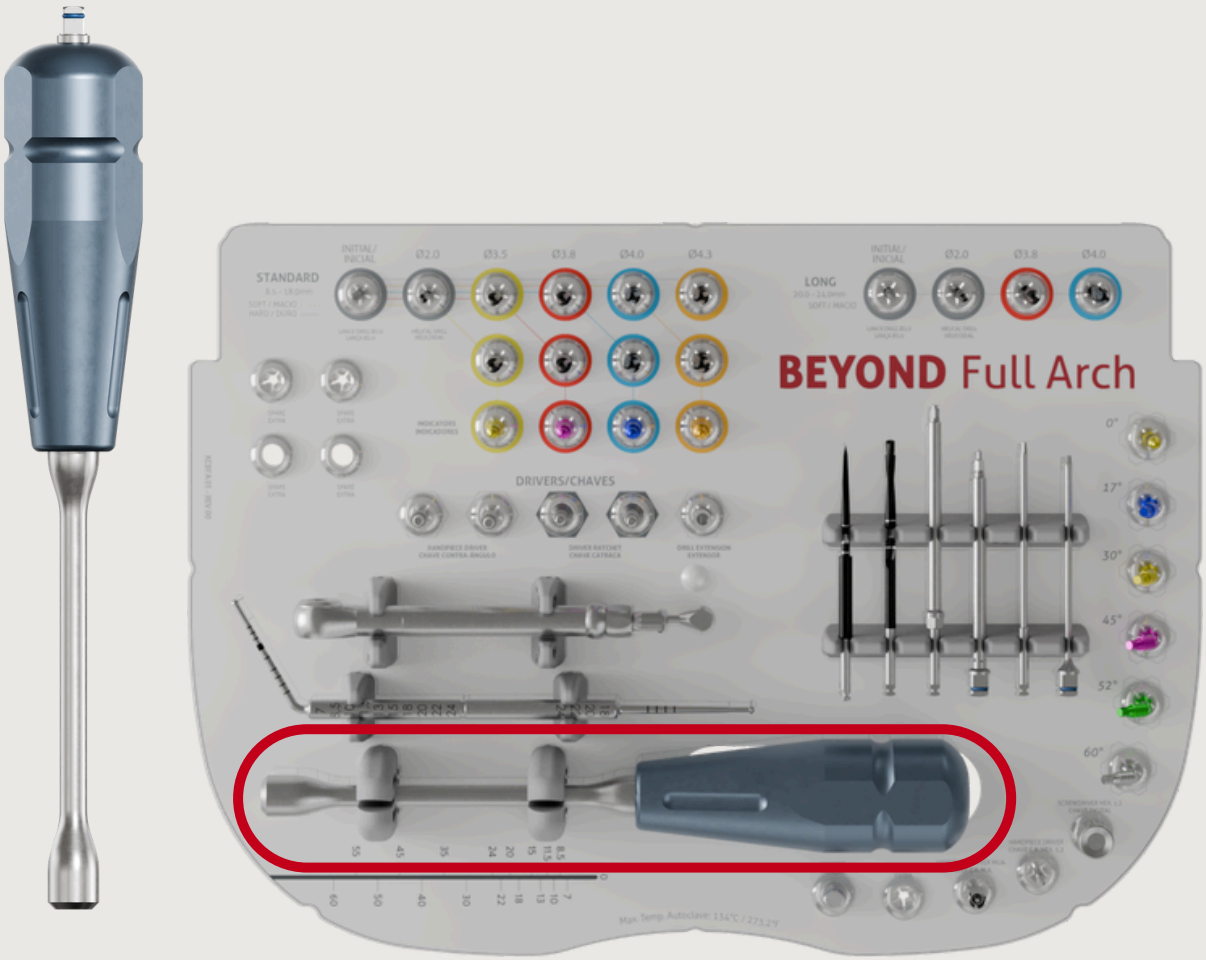

35. DRILL DIAMOND Ø4.0X40MM THICK

Made from surgical stainless steel with coarse granulation diamond coating, 4 mm diameter pencil-shaped inactive tip.

- Maximum rotation: 1200 rpm;
- Position the Drill on the marking made with the helical lance and start drilling with slow and intermittent movements to enlarge the alveoli;
- Use abundant and uninterrupted irrigation.

Code: FBD 40



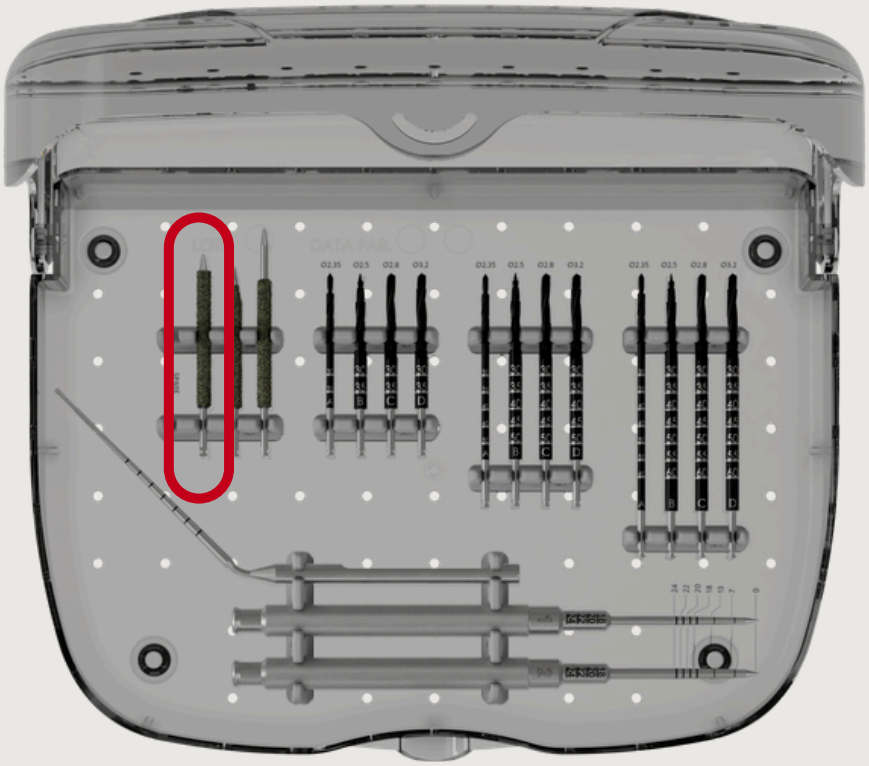

36. DRILL LANCE DIAMOND Ø4.0 THICK

Made from surgical stainless steel with coarse granulation diamond coating, 4 mm diameter pencil-shaped active tip.

- Maximum rotation: 1200 rpm;
- Position the Drill on the marking made with the helical lance and start drilling with slow and intermittent movements to enlarge the alveoli;
- Use abundant and uninterrupted.

Code: FBD 40LC



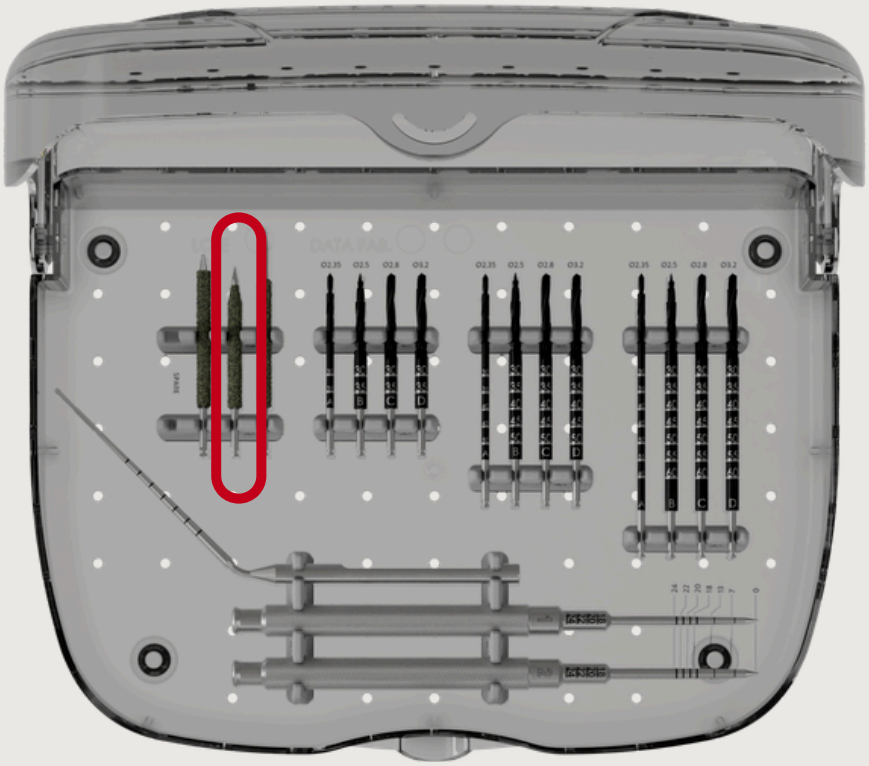

37. DRILL DIAMOND Ø4.0 LONG THICK

Made from surgical stainless steel with coarse granulation diamond coating, 4 mm diameter pencil-shaped long inactive tip.

- Maximum rotation: 1200 rpm;
- Position the Drill on the marking made with the helical lance and start drilling with slow and intermittent movements to enlarge the alveoli;
- Use abundant and uninterrupted irrigation.

Code: FBD 40L



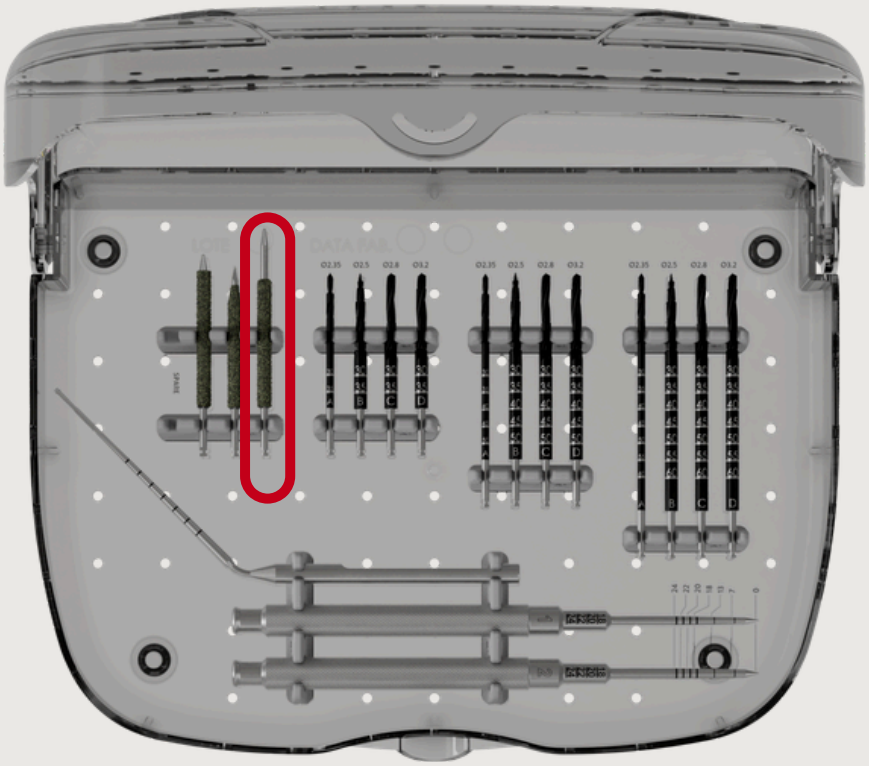

38. DRILL HELICAL Ø2.35X40MM

Made from surgical stainless steel with DLC (Diamond-Like Carbon) coating, this instrument is used to perforate the surgical site at the medial wall of the zygomatic bone. It provides a safe pathway for the subsequent drills in the system. The drill features depth markings that must be matched to the length of the implant to be placed.

- Maximum rotation speed: 1200 rpm;
- Laser markings: 30.0 mm to 35.0 mm;
- Position the drill and begin drilling with slow, intermittent movements;
- Do not perform lateral movements during drilling, as this may damage the osteotomy and hinder implant placement;
- Use abundant and continuous irrigation.

Code: FHZ 2340



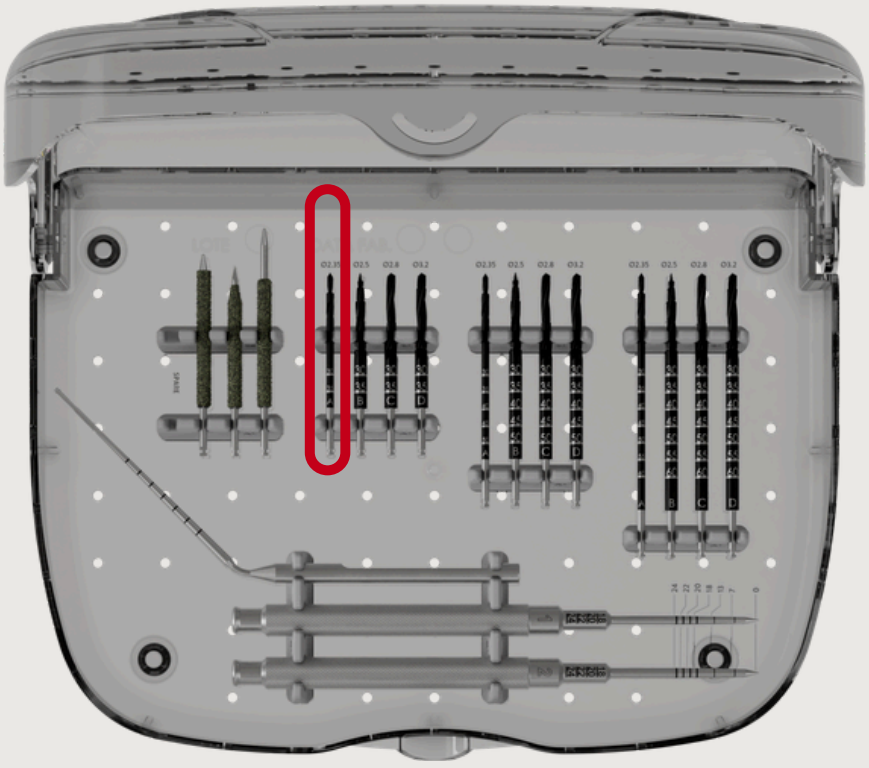

39. DRILL HELICAL Ø2.5X40MM

Made from surgical stainless steel with DLC (Diamond-Like Carbon) coating, this instrument is used to perforate the surgical site at the medial wall of the zygomatic bone. It provides a safe pathway for the subsequent drills in the system. The drill features depth markings that must be matched to the length of the implant to be placed.

- Maximum rotation speed: 1200 rpm;
- Laser markings: 30.0 mm to 35.0 mm;
- Position the Drill on the mark made with the anterior Drills and start drilling with slow and intermittent movements until reaching the predetermined depth;
- Do not perform lateral movements during drilling, as this may damage the osteotomy and hinder implant placement;
- Use abundant and continuous irrigation.

Code: FHZ 2540



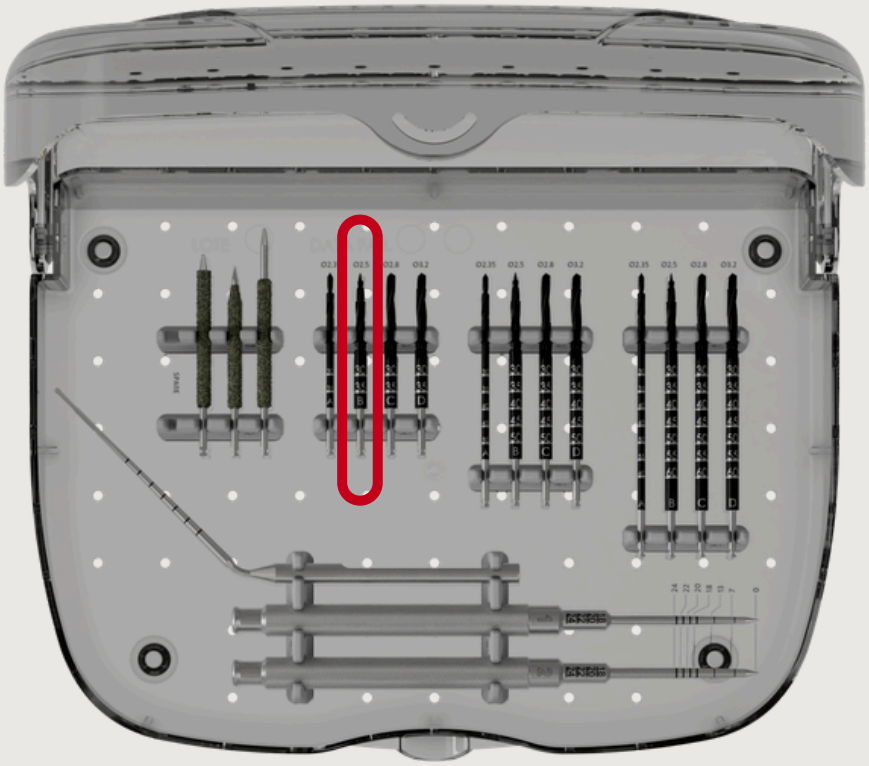

40. DRILL HELICAL Ø2.8X40MM

Made from surgical stainless steel with DLC (Diamond-Like Carbon) coating, this instrument is used to perforate the surgical site at the medial wall of the zygomatic bone. It provides a safe pathway for the subsequent drills in the system. The drill features depth markings that must be matched to the length of the implant to be placed.

- Maximum rotation speed: 1200 rpm;
- Laser markings: 30.0 mm to 35.0 mm;
- Position the Drill on the mark made with the anterior Drills and start drilling with slow and intermittent movements until reaching the predetermined depth; Do not perform lateral movements during drilling, as this may damage the osteotomy and hinder implant placement;
- Use abundant and continuous irrigation.

Code: FHZ 2840



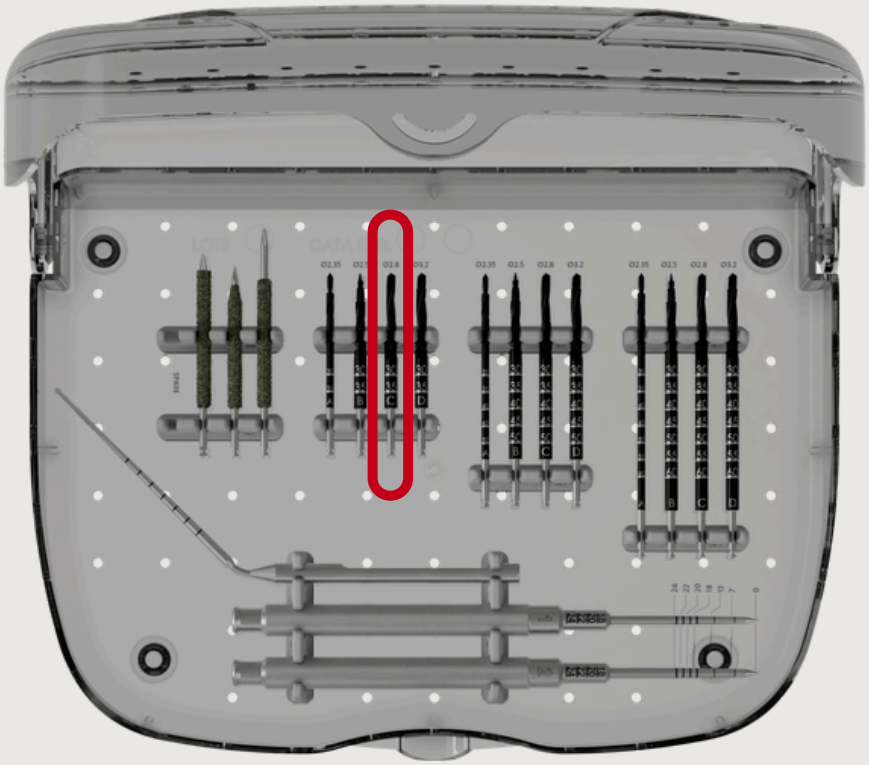

41. DRILL HELICAL Ø3.2X40MM

Made from surgical stainless steel with DLC (Diamond-Like Carbon) coating, this instrument is used to perforate the surgical site at the medial wall of the zygomatic bone. It provides a safe pathway for the subsequent drills in the system. The drill features depth markings that must be matched to the length of the implant to be placed.

- Maximum rotation speed: 1200 rpm;
- Laser markings: 30.0 mm to 35.0 mm;
- Position the Drill on the mark made with the anterior Drills and start drilling with slow and intermittent movements until reaching the predetermined depth; Do not perform lateral movements during drilling, as this may damage the osteotomy and hinder implant placement;
- Use abundant and continuous irrigation.

Code: FHZ 3240



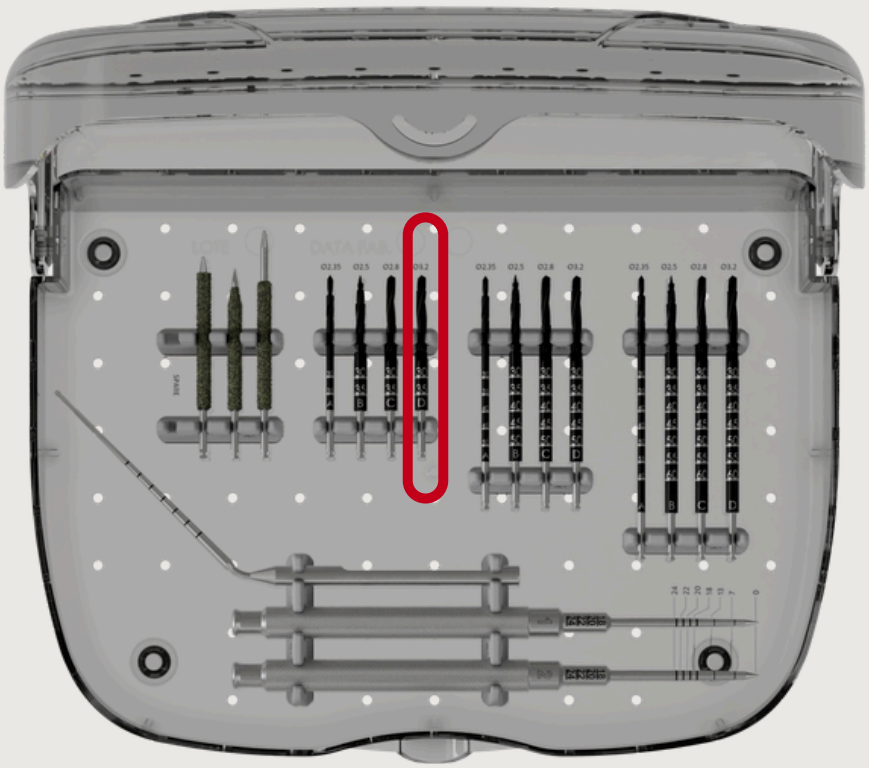

42.DRILL HELICAL Ø2.35X55MM

Made from surgical stainless steel with DLC (Diamond-Like Carbon) coating, this instrument is used to perforate the surgical site at the medial wall of the zygomatic bone. It provides a safe pathway for the subsequent drills in the system. The drill features depth markings that must be matched to the length of the implant to be placed.

- Maximum rotation speed: 1200 rpm;
- Laser markings: 30.0 mm to 50.0 mm;
- Position the drill and begin drilling with slow, intermittent movements;
- Do not perform lateral movements during drilling, as this may damage the osteotomy and hinder implant placement;
- Use abundant and continuous irrigation.

Code: FHZ 2355



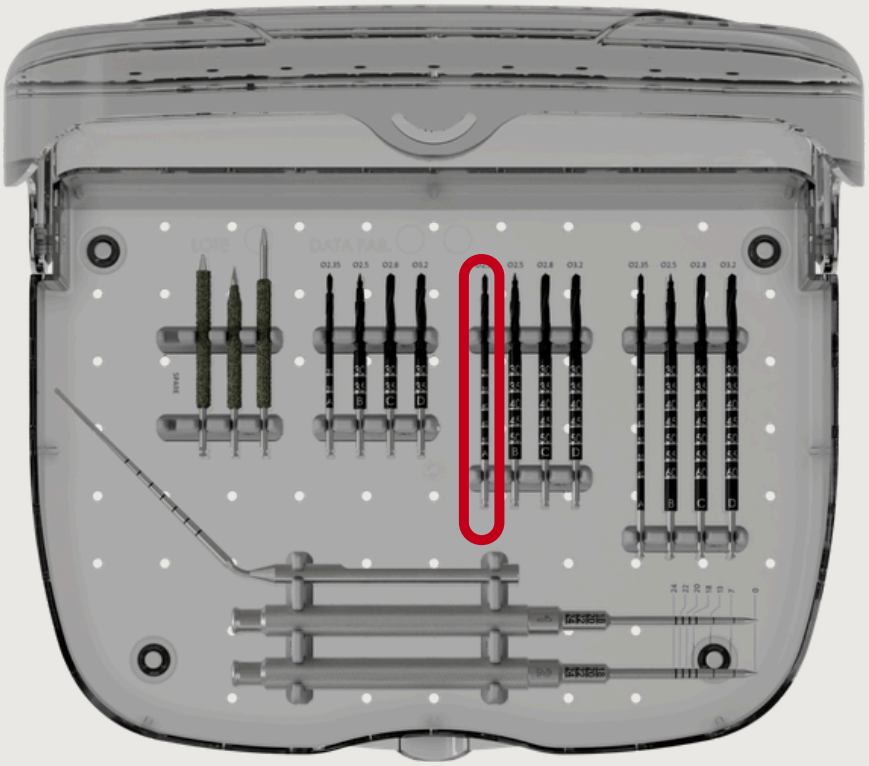

43. DRILL HELICAL Ø2.5X55MM

Made from surgical stainless steel with DLC (Diamond-Like Carbon) coating, this instrument is used to perforate the surgical site at the medial wall of the zygomatic bone. It provides a safe pathway for the subsequent drills in the system. The drill features depth markings that must be matched to the length of the implant to be placed.

- Maximum rotation speed: 1200 rpm;
- Laser markings: 30.0 mm to 50.0 mm;
- Position the Drill on the mark made with the anterior Drills and start drilling with slow and intermittent movements until reaching the predetermined depth; Do not perform lateral movements during drilling, as this may damage the osteotomy and hinder implant placement;
- Use abundant and continuous irrigation.

Code: FHZ 2555



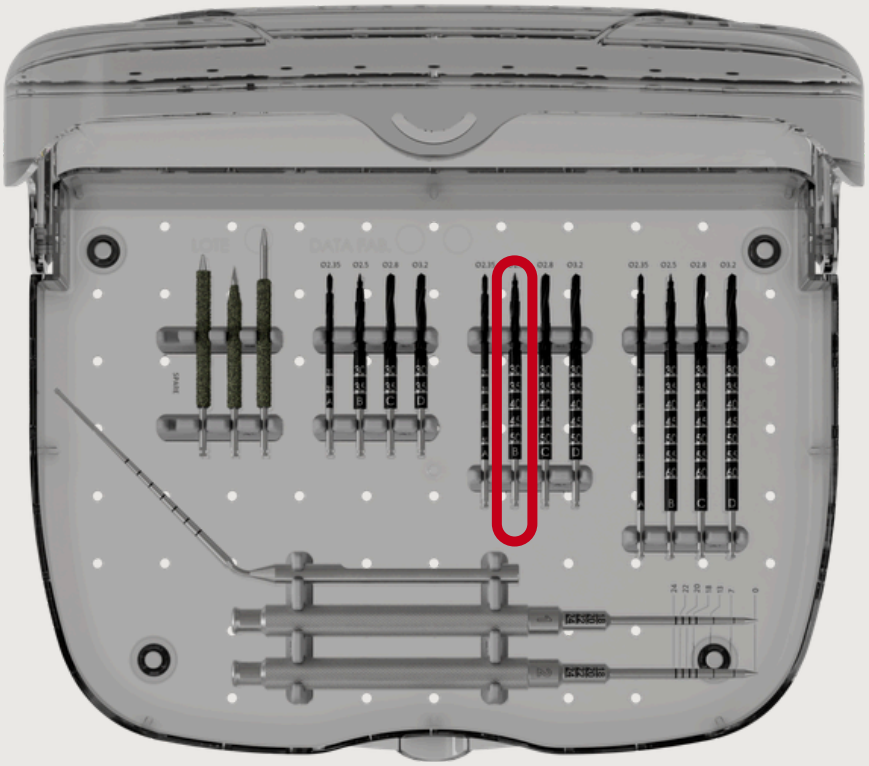

44. DRILL HELICAL Ø2.8X55MM

Made from surgical stainless steel with DLC (Diamond-Like Carbon) coating, this instrument is used to perforate the surgical site at the medial wall of the zygomatic bone. It provides a safe pathway for the subsequent drills in the system. The drill features depth markings that must be matched to the length of the implant to be placed.

- Maximum rotation speed: 1200 rpm;
- Laser markings: 30.0 mm to 50.0 mm;
- Position the Drill on the mark made with the anterior Drills and start drilling with slow and intermittent movements until reaching the predetermined depth;
- Do not perform lateral movements during drilling, as this may damage the osteotomy and hinder implant placement;
- Use abundant and continuous irrigation.

Code: FHZ 2855



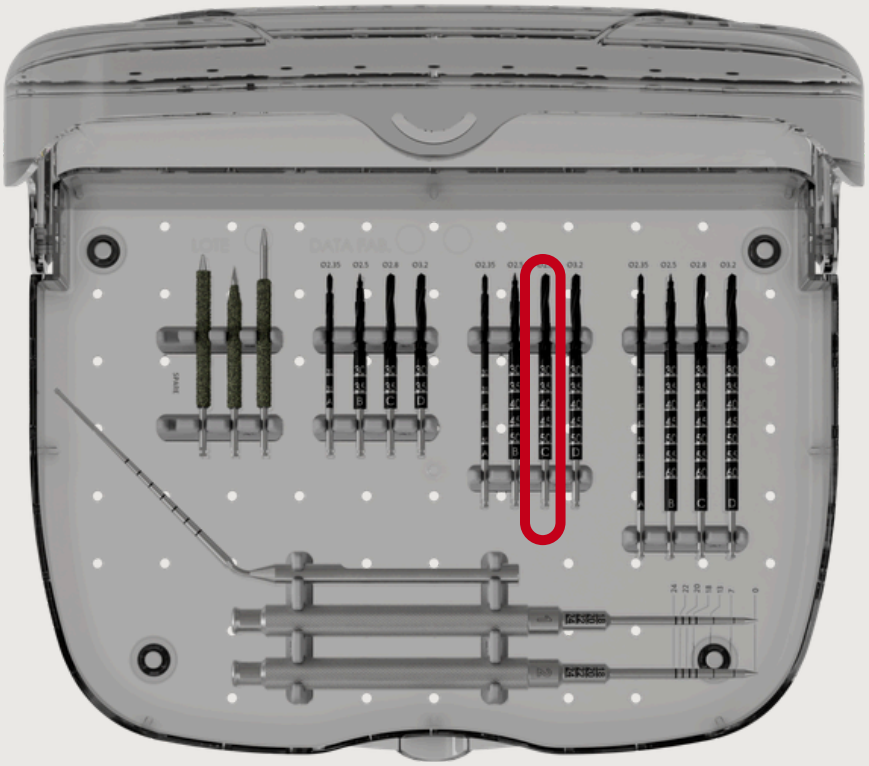

45.DRILL HELICAL Ø3.2X55MM

Made from surgical stainless steel with DLC (Diamond-Like Carbon) coating, this instrument is used to perforate the surgical site at the medial wall of the zygomatic bone. It provides a safe pathway for the subsequent drills in the system. The drill features depth markings that must be matched to the length of the implant to be placed.

- Maximum rotation speed: 1200 rpm;
- Laser markings: 30.0 mm to 50.0 mm;
- Position the Drill on the mark made with the anterior Drills and start drilling with slow and intermittent movements until reaching the predetermined depth; Do not perform lateral movements during drilling, as this may damage the osteotomy and hinder implant placement;
- Use abundant and continuous irrigation.

Code: FHZ 3255



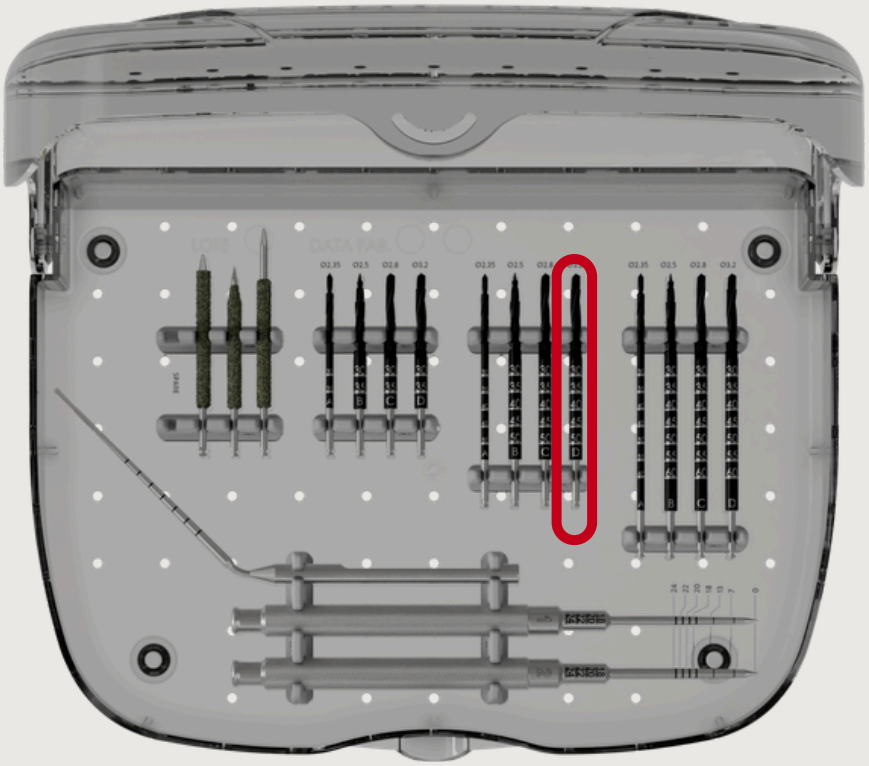

46. DRILL HELICAL Ø2.35X70MM

Made from surgical stainless steel with DLC (Diamond-Like Carbon) coating, this instrument is used to perforate the surgical site at the medial wall of the zygomatic bone. It provides a safe pathway for the subsequent drills in the system. The drill features depth markings that must be matched to the length of the implant to be placed.

- Maximum rotation speed: 1200 rpm;
- Laser markings: 30.0 mm to 60.0 mm;
- Position the drill and begin drilling with slow, intermittent movements;
- Do not perform lateral movements during drilling, as this may damage the osteotomy and hinder implant placement;
- Use abundant and continuous irrigation.

Code: FHZ 2370



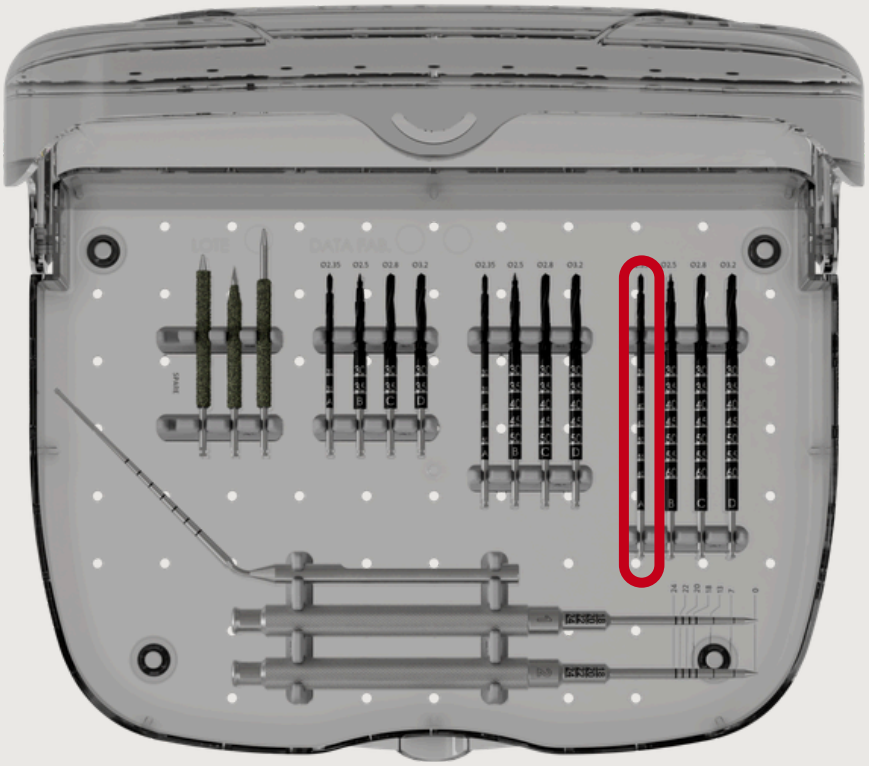

47. DRILL HELICAL Ø2.5X70MM

Made from surgical stainless steel with DLC (Diamond-Like Carbon) coating, this instrument is used to perforate the surgical site at the medial wall of the zygomatic bone. It provides a safe pathway for the subsequent drills in the system. The drill features depth markings that must be matched to the length of the implant to be placed.

- Maximum rotation speed: 1200 rpm;
- Laser markings: 30.0 mm to 60.0 mm;
- Position the Drill on the mark made with the anterior Drills and start drilling with slow and intermittent movements until reaching the predetermined depth;
- Do not perform lateral movements during drilling, as this may damage the osteotomy and hinder implant placement;
- Use abundant and continuous irrigation.

Code: FHZ 2570



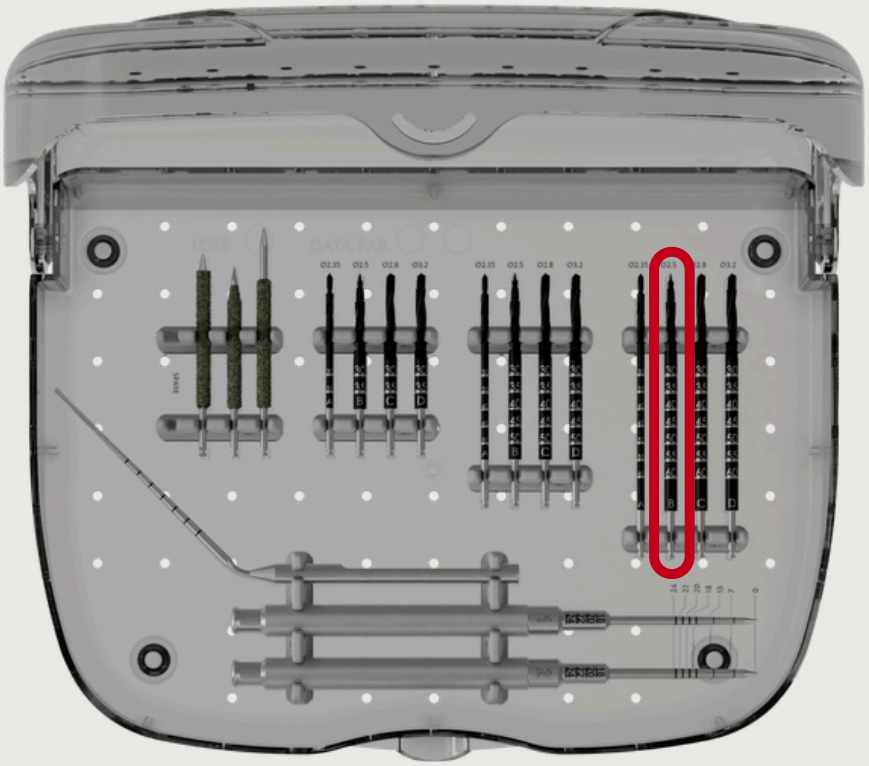

48.DRILL HELICAL Ø2.8X70MM

Made from surgical stainless steel with DLC (Diamond-Like Carbon) coating, this instrument is used to perforate the surgical site at the medial wall of the zygomatic bone. It provides a safe pathway for the subsequent drills in the system. The drill features depth markings that must be matched to the length of the implant to be placed.

- Maximum rotation speed: 1200 rpm;
- Laser markings: 30.0 mm to 60.0 mm;
- Position the Drill on the mark made with the anterior Drills and start drilling with slow and intermittent movements until reaching the predetermined depth;
- Do not perform lateral movements during drilling, as this may damage the osteotomy and hinder implant placement;
- Use abundant and continuous irrigation.

Code: FHZ 2870



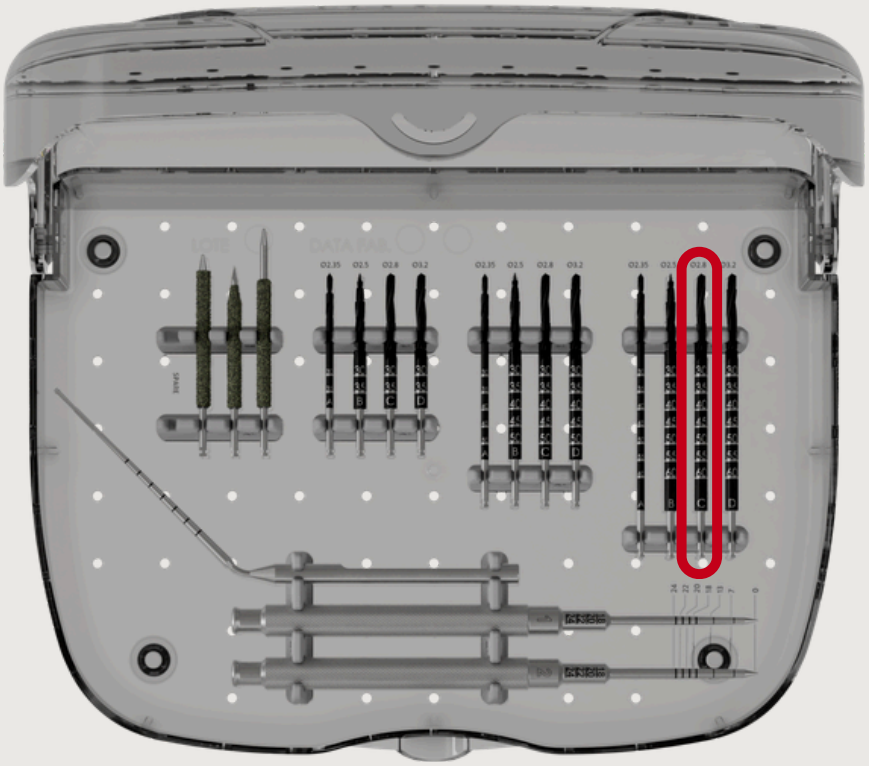

49. DRILL HELICAL Ø3.2X70MM

Made from surgical stainless steel with DLC (Diamond-Like Carbon) coating, this instrument is used to perforate the surgical site at the medial wall of the zygomatic bone. It provides a safe pathway for the subsequent drills in the system. The drill features depth markings that must be matched to the length of the implant to be placed.

- Maximum rotation speed: 1200 rpm;
- Laser markings: 30.0 mm to 60.0 mm;
- Position the Drill on the mark made with the anterior Drills and start drilling with slow and intermittent movements until reaching the predetermined depth;
- Do not perform lateral movements during drilling, as this may damage the osteotomy and hinder implant placement;
- Use abundant and continuous irrigation.

Code: FHZ 3270



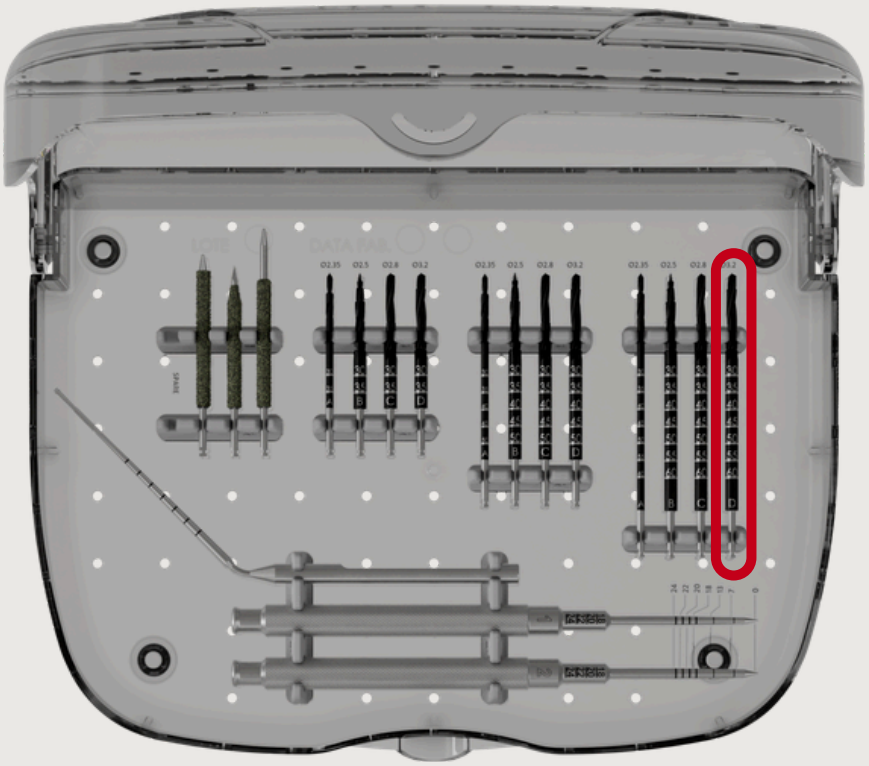

50. DEPTH PROBE NARROW

Made of titanium, the depth rods aim to assist the worker in the exploratory probing of the freshly drilled cavity and guide the professional in the perforated length.

Code: SOPZE

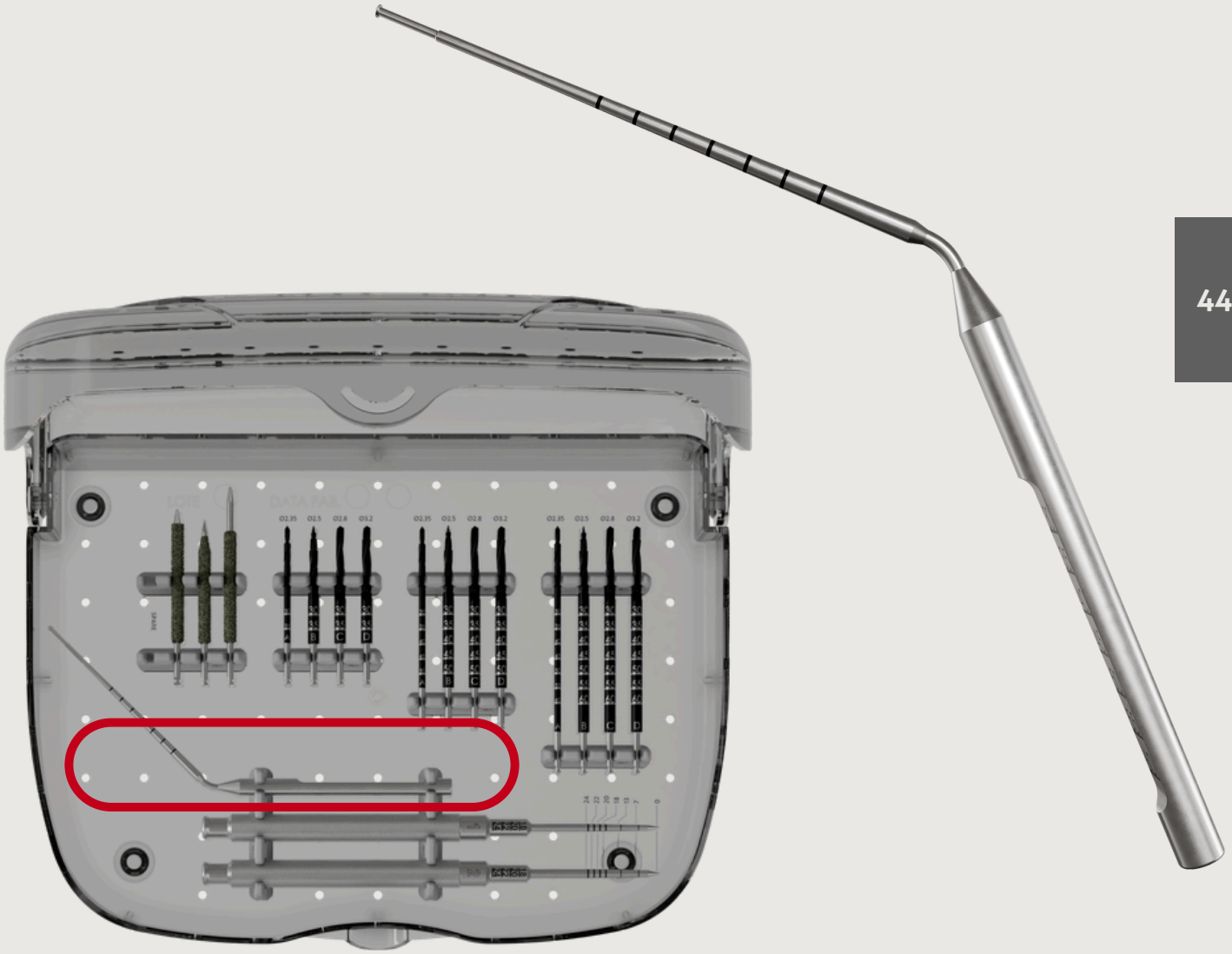

51.OSTEOTOME 01

Made of stainless steel with a tip diameter of 1.9 mm, laser markings at depths of 7, 13, 18, 20, 22, and 24 mm, this instrument is used with the aid of a surgical mallet for bone expansion, avoiding the need for bone removal.

Code: OST 01

52. OSTEOTOME 02

Made of stainless steel with a tip diameter of 2.4 mm, laser markings at depths of 7, 13, 18, 20, 22, and 24 mm, this instrument is used with the aid of a surgical mallet for bone expansion, avoiding the need for bone removal.

Code: OST 02

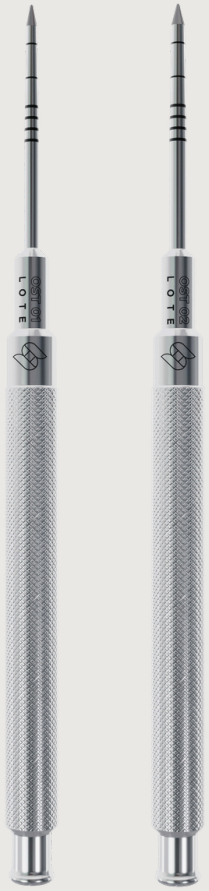

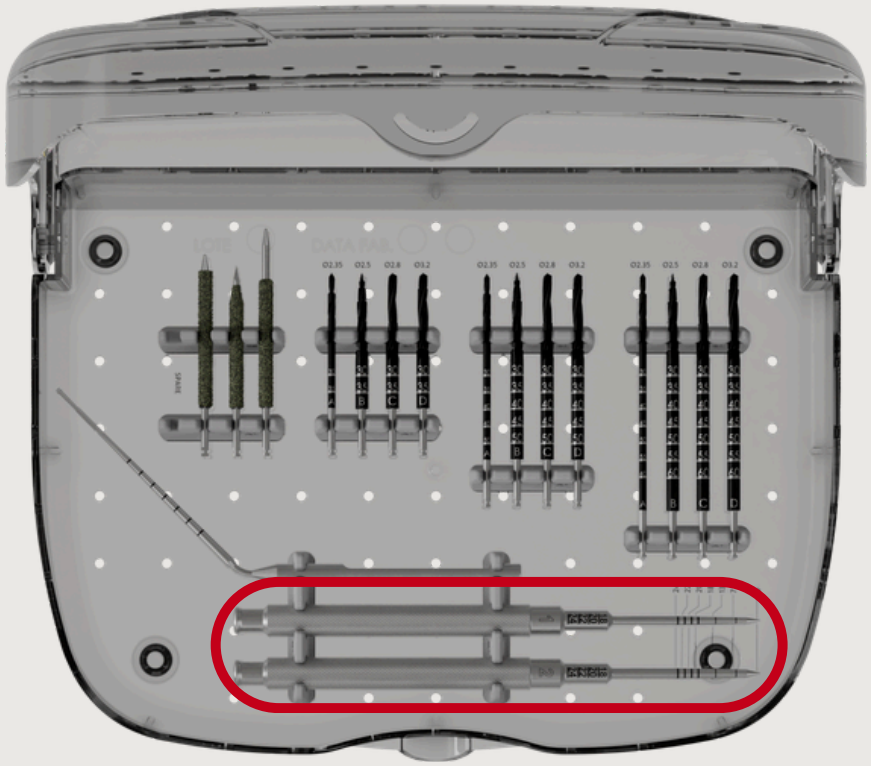

53.TORQUE WRENCH CLEANING PROCEDURES

For the **TMECC 02** torque wrench model, the following steps must be followed:

- The ratchet must be disassembled and cleaned immediately after every use.
- For proper cleaning, disassemble multi-piece instruments into their single parts.
- No tools are necessary for this process.

Pull the steering reversing rod back.

› 01

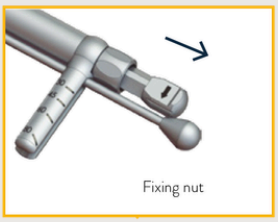

Remove the Ratchet from the socket with your head.

› 02

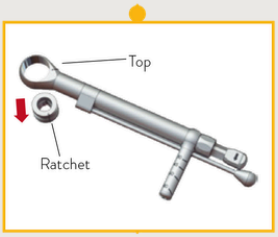

Rotate the fixing nut counterclockwise.

› 03

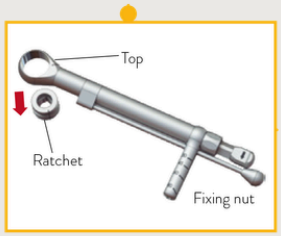

Start the cleaning and washing procedure.

› 06

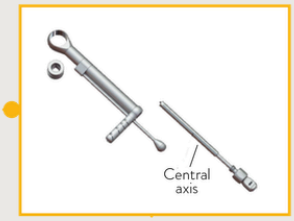

Remove the central shaft of the torqueratchet.

› 04



Remove the torque grading rod.

› 05

54. CLEANING THE KIT CASE

1. Manually remove all surgical instruments from the kit. Wash the kit trays separately.
2. Prepare the enzymatic detergent according to the detergent manufacturer's recommendation.
3. Immerse all parts of the product into the prepared detergent solution and leave for 5 minutes. Then, using a soft-bristle brush, scrub the parts for at least 2 minutes until all organic matter is completely removed.
4. Remove the parts from the detergent solution and rinse with tap water for 1 minute until the residue is completely removed. Repeat the rinse two more times.
5. Visually inspect each part to check for process residues or organic residues from the used of the product.
6. If residue is detected on the product, repeat the cleaning process until it is completely removed.
7. Dry the parts with a soft, clean, dry cloth or disposable paper.

55. CLEANING SURGICAL INSTRUMENTS

1. Disassemble the product (if applicable). For the torque wrench, disassemble it completely, remove all the internal organic matter using tap water and follow to the next step only after performing such procedures.
2. Prepare the enzymatic detergent according to the detergent manufacturer's recommendation.
3. Immerse all parts of the product into the prepared detergent solution and leave for 5 minutes. Then, using a soft bristle brush, scrub the parts for at least 2 minutes until all organic matter is completely removed from the products.
4. Remove the parts from the detergent solution and rinse with tap water for 1 minute until the residue is completely removed. Repeat the rinse two more times.
5. Visually inspect each part to check for process residues or organic residues resulting from use of the product.
6. If residue is detected on the product, repeat the cleaning process until the residue is completely removed.
7. Dry with a soft, clean, dry cloth or disposable paper.
8. Proceed to the sterilization process.

56. CLEANING RECOMMENDATION

- Wear appropriate clothing (gloves, masks, glasses, hats, etc.).
- Begin cleaning immediately after surgical use.
- Never let the instrument dry containing organic residues after surgical use.
- Never let the instrument dry naturally after cleaning.
- Never use saline solutions, especially sodium hypochlorite and saline, disinfectants, hydrogen peroxide or alcohol to clean or rinse surgical
- instruments and Kit trays.
- Never use steel wool or sponges or abrasive products, so that the instruments are not damaged.
- Do not accumulate instruments in large quantities on top of each other to avoid deformation of smaller and delicate pieces.

57. STERILIZATION

- The reusable product is provided non-sterile. It must be sterilized in an autoclave.
- Dry all instruments before the steam sterilization cycle.
- The product must be enclosed in a steam sterilizable wrap.
- Steam sterilize in cycles of 121°C at 1 ATM pressure for 30 minutes. Drying time 30 minutes.
- Always accommodate the case in autoclave over a a flat surface and away of device walls.
- Never stack objects or other cases.

58. STERILIZATION RECOMMENDATIONS

- Sterilize the products in the same day or one day earlier the procedure.
- The chemical sterilization is not recommended, once some products may cause the discoloration and damages to the case.
- Do not use temperature higher than 60°C to drying process.
- Do not use dry heat stoves for sterilization of the instruments and kits from S.I.N.

59. CLEANING SURGICAL TORQUE RATCHET

Cleaning must be carried out immediately after using the Torque Ratchet. To clean it, the Torque Ratchet must be disassembled; the use of tools is not necessary.

1. Pull the steering reversing rod back.
2. Remove the ratchet from the socket with your head.
3. Rotate the fixing door counterclockwise.
4. Remove the central shaft of the Torque Ratchet.
5. Remove the torque grading rod.
6. Prepare the enzymatic detergent according to the manufacturer's instructions.
7. Immerse all parts of the product in the prepared detergent solution and leave for at least 5 minutes, then using a soft bristle brush, scrub the parts to remove organic matter from the products.
8. Remove the pieces from the detergent solution and rinse with running water for 1 minute, repeat the rinse two more times, totaling 3 rinses of 1 minute each.
9. Visually inspect each piece to check whether there is residue from the cleaning process or organic residues from the use of the product.
10. If the presence of residue on the product is confirmed, repeat the cleaning process until the residue is completely removed.
11. Dry with a soft, clean, dry cloth or disposable paper.

60. SERVICE LIFE

The Beyond Full Arch Kit can be used as outlined below, depending on proper handling, cleaning, and sterilization:

Drills:

Up to 20 osteotomies in high-density bone

Up to 30 osteotomies in low-density bone

Direction Indicator, Drivers, Torque Wrench, Transmucosal Gauge, and Depth Probe: Can be used up to 250 times

Case:
Can be cleaned and sterilized up to 250 times

OUR GLOBAL PRESENCE

POINT YOUR PHONE'S CAMERA AT THE QRCODE AND SEE WHERE S.I.N. IS PRESENT

S.I.N. USA

7755 E Gray Rd, Scottsdale, AZ 85260
1-866-507-9315 | orders@sindentalusa.com

S.I.N.

Avenida Vereador Abel Ferreira, 2140

Jardim Anália Franco - São Paulo - SP - CEP 03340-000

sin360.us | sinimplantsystem.com

360° S.I.N.

1-866-507-9315

SINdentalusa.com | sinimplantsystem.com

Visit our social networks:

@sindentalUSA

@sindentalUSA

@sindentalusa